NOVO

10-DAY QUICKSHIP PROGRAM

FRÍANT | ALL WORKSTYLES WELCOME

TABLE OF CONTENTS

INTRODUCTION

Terms and Conditions 4
Quickship Fabrics 7
Pattern Direction 8
Quickship Finishes 9
Pull Options, 10-Day Quickship Storage 10
Data Port Plate 11
Panel Options & Knockout Location 12
Maximum Panel Run 13
Festoons 15
Transaction Support 17
Grommet Locations 18

MONOLITHIC PANELS

Fabric-Covered Panel
- Non-Electrical 20
- Electrical 22

Partial-Glazed Panel
- Non-Electrical 24
- Electrical 25

PANEL HARDWARE

Draw Rods 26
Connectors
- 2 Way post 28
- 3 Way post 29
- 4 Way post 30

Finished End 31
Finished End, Change of Height 32
Wall Connectors 34

ELECTRICAL DISTRIBUTION

Power Entry
- Base Power Entry 36
- Ceiling & Data Power Entry 37

Receptacles 37
Data Port Plates 37
Pass Thru Festoon 38
Power Panel Conversion Kit 38

WORKSURFACES

Rectangular 39
90 ° Corner
- Notched 42
- Curved 43

Half Circle 44
D - Shaped 45
Transaction
- Rectangular 46
- Corner 47

MY-HITE WORKSURFACES

Rectangular 48
Corner 49
D-Shaped 50

WORKSURFACE SUPPORTS

Square Post Leg 51
Support End Panel 52
Square Metal P-Leg 53
Square Corner, Triangle shape Leg 54
Taper Legs 55
Inset Legs 56
Brackets
- Corner Bracket 57
- Flat Bracket 58

Mending Plates 59
Anti-Sag Bars 60

COMPONENTS

Components 61
Tackboards 62
Overheads and Shelves 63
Upmount Sliding Overhead Cabinet 64
Upmount Pneumatic Overhead Cabinet 65

STORAGE

Pedestals 66
Lateral Files 70
- Front to Back File Bars 71
- Lateral File Counterweight 71
- Extended Glide 71

ACCESSORIES

Accessories 72
Keyed Alike 74

Terms and Conditions

QUICKSHIP PROGRAM
Designed for complete workstation orders and parts may not be ordered separately. Orders with the Quickship program are limited to under 50 workstations. For larger orders, please contact your customer service representative for availability. 10 Day Quickship orders must be on separate P.O.s and cannot be combined with standard lead time orders.

PRICES
All Prices are F.O.B. point (Continental U.S.). We reserve the right to change prices without prior notice.

ORDERING
Purchase Orders should be sent to Friant & Associates, LLC at orders@friant.com, or faxed to (510) 535-6895. If your specifications were created with CAP, GIZA, or Project Matrix please send the worksheet (SP4) with your Purchase Order.

MAXIMUM ORDER
All of our 10 day Quickship programs will be offered with a maximum order size of $20,000 net. We encourage our customers to check stock on orders over $20,000 as we may be able to accomodate larger opportunities which require 10 day lead time.

TERMS
Net 30 days from date of invoice. Invoices are delinquent if not paid 30 days from date of invoice. In the event timely payment is not made, interest will be charged at the rate of 1.5% per month on delinquent accounts. Buyers will also be liable for normal collection costs and attorney's fee. 50% deposit is required with every order, unless prior arrangements have been made.

ORDERS
Orders are only accepted by issuance of our formal acknowledgment, and are subject to the terms set forth herein and on our order acknowledgment. It is the responsibility of the buyer to review our acknowledgment for accuracy.

LEAD TIME
Lead times are subject to availability.

SHIPPING
Friant generally palletizes, boxes and/or shrink-wraps its products. If buyer requests additional packaging or special shipping, then it is responsible for any extra costs that result. Buyer obtains title to products and assumes the risk of loss for them upon shipment from Friant's plant.

CLAIMS
We are not responsible for damage suffered in transit. Merchandise should be inspected for possible freight damage upon delivery. The consignee should file for damage or shortages with the carrier within 5 days of delivery. You are also protected for "concealed damage" if you file claim with the carrier within 5 days of delivery. Buyer must make all claims against Friant for defects, errors or shortages in writing within 10 days after delivery. Failure to make such a claim shall constitute full acceptance.

RETURNS
No merchandise may be returned without our written consent and shipping instructions. Unauthorized returns will not be accepted and will be returned freight collect.

PARTIAL SHIPMENTS
We will make every attempt to ship orders complete and on schedule. However, we reserve the right to make partial shipments, as merchandise is ready. Invoices covering these shipments are to be paid as they become due.

ORDER CHANGE — CANCELLATIONS
Our order confirmation is final and binding. Any order change or cancellation is subject to our ability to conform. For the most up to date information, always review the order change/cancellation policy online. Allowable changes within the posted policy must be made in writing.

SHIPMENT AND PREPAID FREIGHT
Unless otherwise instructed, we reserve the option to ship by what is, in our opinion, the best possible way. Upon request, we will prepay and add freight for accounts with established credit.

DELIVERY
We are not liable for delay or failure of delivery due to strikes and/or differences with workmen, war, riot, fire, compliance with government regulations, acts of nature, failure or delays of sources of supply, or any other causes beyond our control.

STORAGE
If buyer cannot accept delivery when merchandise is ready, we reserve the right to transfer goods to storage. Costs of transfer and storage will be charged to the buyer's account, and we will deem such transfer as constituting shipment for all purposes, including invoicing, as of the date the transfer is made.

Terms and Conditions continued..

CONSTRUCTION — SPECIFICATIONS
All items are produced to price list specifications unless otherwise advised. All dimensions shown are approximate. Manufacturer reserves the right to make modifications and/or improvements without prior notice.

FABRIC APPLICATION
Standard fabric application for panels 67" and below is Non-Directional application. Panels taller than 67" are only available in Directional application. When ordering panels 67" and below to match a panel taller than 67", specify matching direction. See individual pricebook specifications for details.

Friant & Associates is not responsible for charges associated with replacement of products due to incorrect specifications.

CUSTOMER'S OWN MATERIAL
Yardage requirement is based on 66" wide plain covering material, and must be increased if less than 66" wide. Special instructions for handling material (pattern, directional fabric, right side of reversible fabric, etc.) must be submitted in writing before fabric is delivered. In the absence of special instructions, we reserve the right to use our own judgment. We reserve the right to reject any covering, which in our opinion, is unsuitable for our upholstery purposes. However, in no instance shall we be held responsible for unsatisfactory results due to use of covering unsuitable for our upholstery methods.

We will not be responsible for errors caused by buyers not supplying us with sample cuttings attached to their order giving full identification of covering material, (name of supplier, covering name, number and color) for identification purposes and advising us of model number and quantity to which each cover is to be applied.

Customer's own material that is shipped freight collect will be refused. A service charge will be applied for the return of unusable C.O.M. Contact factory.

RIGHTS AND WARRANTIES — LIMITED LIFETIME WARRANTY
This warranty is given to the initial purchaser and is valid from the date of purchase, for as long as the initial purchaser owns the product. This warranty covers defects in material and craftsmanship found during normal usage of the product during the warranty period. Normal usage is defined by 8 hour shifts in the product's intended application and in an indoor environment that conforms to the ANSI/ASHRAE Standard 55: Thermal Environmental Conditions for Human Occupancy (relating to air temperature, mean radiant temperature, air velocity, clothing insulation, metabolic rate, and humidity). Friant's warranty does not cover usage other than normal usage as defined in the previous sentence. If the product is defective, and if written notice of the defect is given to Friant & Associates within the applicable warranty period, Friant & Associates, at its option, will either repair or replace the defective product with a comparable component or product. This warranty applies to all products except as noted below.

High wear parts, such as wood veneer, fabrics, laminates and other covering material/finishes, foam. glides, etc. are warranted for one (1) year. This warranty does not apply to damage caused by a carrier, alteration to the product not expressly authorized by Friant & Associates, nor to product considered to be of a consumable nature such as bulbs, light ballasts, etc. It also does not apply to "Customer's Own Material" (i.e. material specified by the customer that is not a standard Friant & Associates offering) used in the manufacture of Friant & Associates products.

Our warranty for LED lights is 2 years.

Friant & Associates does not warrant the matching of colors, grain or texture, except to within commercially acceptable standards. This includes normal variations between dye lots (fabrics).

A product will not be considered defective, and Friant & Associates will not be obligated to replace it, if it is not installed in a proper manner (i.e. product not leveled, not secured properly, etc.) or if it is not used in a manner and/or in an environment that constitutes normal usage, as defined above.

Except as noted above, Friant & Associates makes no express or implied warranties to any product, and in particular makes no warranty of fitness for any particular use. At Friant & Associates' option, product repair and replacement is the customer's exclusive remedy for any and all product defects.

Friant & Associates shall not be liable for consequential, economic, or incidental damages arising from any product defect.

Terms and Conditions continued..

CALIFORNIA PROP 65 WARNING
Products in this catalog can expose you to chemicals including wood dust, which is known to the State of California to cause cancer or birth defects or other reproductive harm. For more information go to https://www.p65warnings.ca.gov/products/furniture-products."

CARB
Friant products are CARB 93120 compliant for formaldehyde (phase 2)

TSCA TITLE VI
Friant products are TSCA Title VI Compliant

MAS
Accredited Compliance Designation - ANSI/BIFMA x7.1 & e3-2014 7.6.1, 7.6.2, 7.6.3
California Dept. Of Public Health Standard Method v1.2
Conforms With: LEED v4
Criteria of MAS Certified Green ® Program

10 DAY QUICKSHIP FABRICS

JOURNEY		TERRAIN		SLIDE		SILKY		SKY	
PF801-1	Quest	PF701-1	Cloud	PF101-1	Caramel	PF401-1	Natural	PF301-1	Terra
PF801-2	Voyage	PF701-2	Dusk	PF101-2	Slate	PF401-2	Parids	PF301-2	Birch
PF801-3	Transit	PF701-3	Wave	PF101-3	Pewter	PF401-3	Overcast	PF301-3	Moss
PF801-4	Amble	PF701-4	Earth	PF101-7	Java	PF401-5	Graphite		
PF801-5	Odyssey			PF101-9	Sterling				
PF801-6	Caravan			PF101-10	Crema				
PF801-7	Expedition			PF101-20	Serenity				
PF801-8	Wayfare			PF101-21	Azure				

LIMITED AVAILABILITY

SLIDE		SILKY		STICKS	
PF101-4	Verde	PF401-4	Field	PF501-3	Sage
PF101-6	Vintage			PF501-4	Straw
PF101-8	Latte				
PF101-12	Stem				

Fabric is scheduled for discontinuation when inventory is exhausted. Please contact Customer Service for current stock levels. After discontinuation fabric will be available with extended lead time, subject to minimum yardage requirements.

NOTES:

- Passage and Terrain are not available on acoustical panels, pedestal cushions, tackboards or fabric screens.
- Please refer to the Fabric Direction Section in the Materials Reference Guide on the Dealer Resource Center for more details. http://dealers.friant.com/dealers/product-literature/
- **When ordering panels 67" and below to match an 85"H panel, specify matching direction.**
- Order fabric / finish sample online at www.friant.com
- Colors may vary slightly between dye lots.

Pattern Direction

- Fabric direction is not always determined by the way the pattern is shown on memo sample.
- Certain product construction and sizes require fabric to be applied only Directionally or Non-Directionally.
- Some products have fabric applied either Directionally or Non-Directionally. (Upcharges may apply on some products, see price books for details).
- Please refer to our **Materials Reference Guide** on the Dealer Resource Center for specific pattern application defaults on all of our products: http://dealers.friant.com/dealers/product-literature/
- Our Customer Service Team is happy to answer any questions regarding fabric direction.

Non - Directional Application Shown	Directional Application Shown
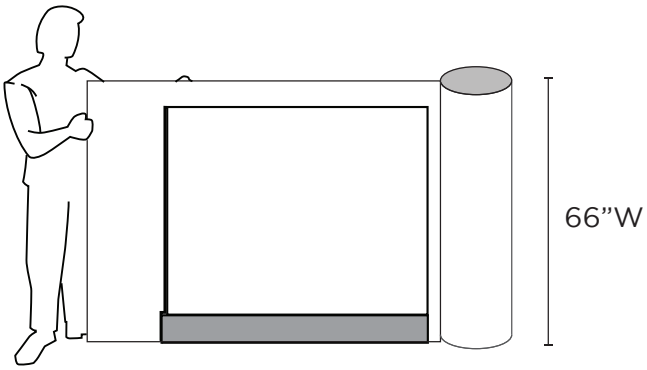	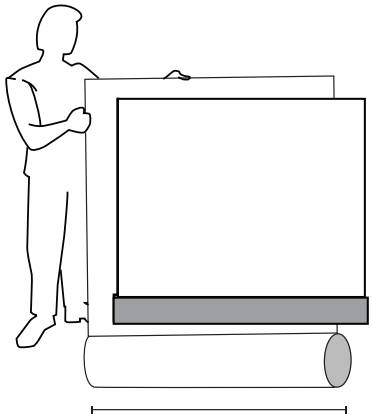

Quickship Finishes

WORKSURFACE FINISHES		EDGE FINISHES (3MM PVC)	
M1	Light Maple	E1	Light Maple
M2	Light Cherry	E2	Light Cherry
M3	Medium Cherry	E3	Medium Cherry
M4	Dark Mahogany	E4	Dark Mahogany
M6	Light Gray	E6	Light Gray
M7	Off White	E7	Off White
M9	Cloud White	E9	Cloud White
M10	Espresso	E10	Espresso
M11	Light Walnut	E14	Light Walnut
M12	Medium Walnut	E15	Medium Walnut
M13	Licorice	E13	Licorice
M14	Carob	E17	Carob
M16	Tundra	E19	Tundra
M22	Harbor	E25	Harbor
M23	Bark	E26	Bark
M24	Tarmac	E27	Tarmac
M25	Winter	E28	Winter
M27	Medium Ash	E30	Medium Ash
M28	Arctic	E31	Arctic
		E11	Medium Tone
		E12	Dark Tone

Note: Match edging to worksurface finish by NAME, not number, or submit order with Edge To Match (ETM).

PAINT FINISH
DT Dark Tone
MT Medium Tone
CW Cloud White

PAINT FINISH
Grommet Color matches cantilever finish selected

PAINT FINISH	GROMMET
DT Dark Tone	Black
MT Medium Tone	Black
CW Cloud White	White

Note: grommets included on corner tops only, see item descriptions

Order samples at **www.friant.com**

Please Note: Images are printed simulations and are not exact matches of finished product. Please request an actual sample from Friant or your sales consultant before specifying finishes.

Pull Options, 10-Day Quickship Storage

You have multiple pull options. Please specify type when ordering. If you have any questions, please contact Friant Customer Service or your local sales rep.

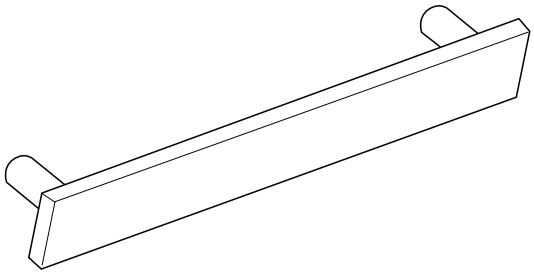

BAR PULL

(Standard Default)
Metal finish

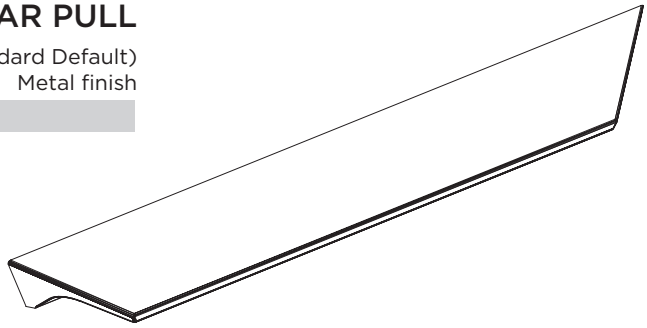

WEDGE PULL

Brushed metal finish
(Upcharge applies to metal storage.)

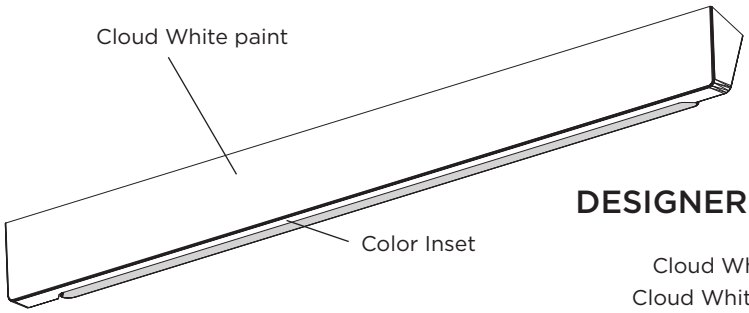

DESIGNER PULL

Cloud White/Red,
Cloud White/Green,
Cloud White/Grey
(Upcharge applies to metal storage.)

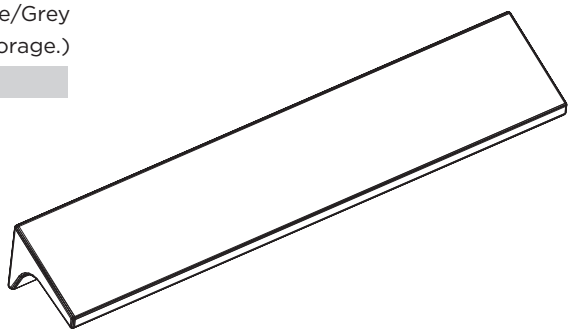

SLANT PULL

Brushed metal
(Upcharge applies to metal storage.)

Data Port Plate

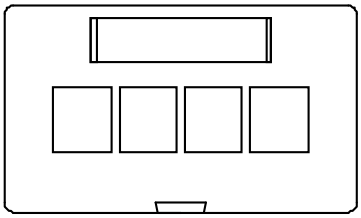

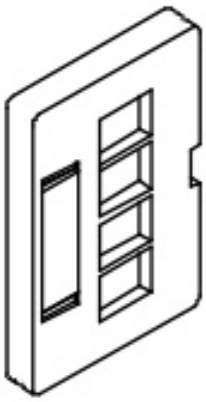

Product Description

PART #: Q1FHDPP

This Data Port Faceplate is field configurable, flush-mounted onto the Panel Base Kickplate, and provides 1 to 4 flush-mount ports for a variety of snap-in connectors and adaptors.

Product Notes

- Installation and changes can be made without removing the Panel Base Kickplate
- Plates can be installed and removed without any tools
- Window ID provided with each Data Port Plate
- Release latch provides easy access to connections without any tools
- Blank inserts included with each Data Port Plate

Dimensions

HEIGHT: $2^{1/8}$”
WIDTH: $3^{5/8}$”
DEPTH: 0.75” (from face of Panel Base Kickplate)
MATERIAL: High impact plastic

The products listed in this pricer are manufactured by Friant & Associates, LLC. Any reference or similarity to the products of an original equipment manufacturer (O.E.M.) is not an expression of their approval or authorization.

Panel Options

The Novo 10-day Quickship program offers categories of panels: Monolithic panels.

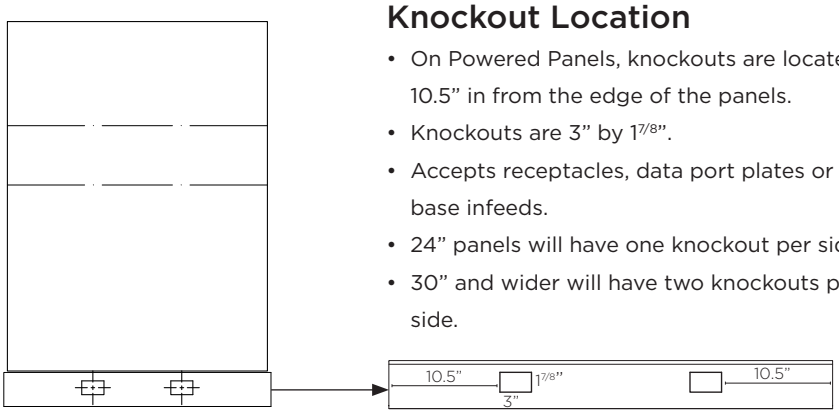

Knockout Location

- On Powered Panels, knockouts are located 10.5" in from the edge of the panels.
- Knockouts are 3" by 1 7/8".
- Accepts receptacles, data port plates or base infeeds.
- 24" panels will have one knockout per side.
- 30" and wider will have two knockouts per side.

MONOLITHIC
Fabric Covered or
Partial Glazed

All panels are available electrical or non-electrical.

Panel Creep

2-Way	3-Way	4-Way

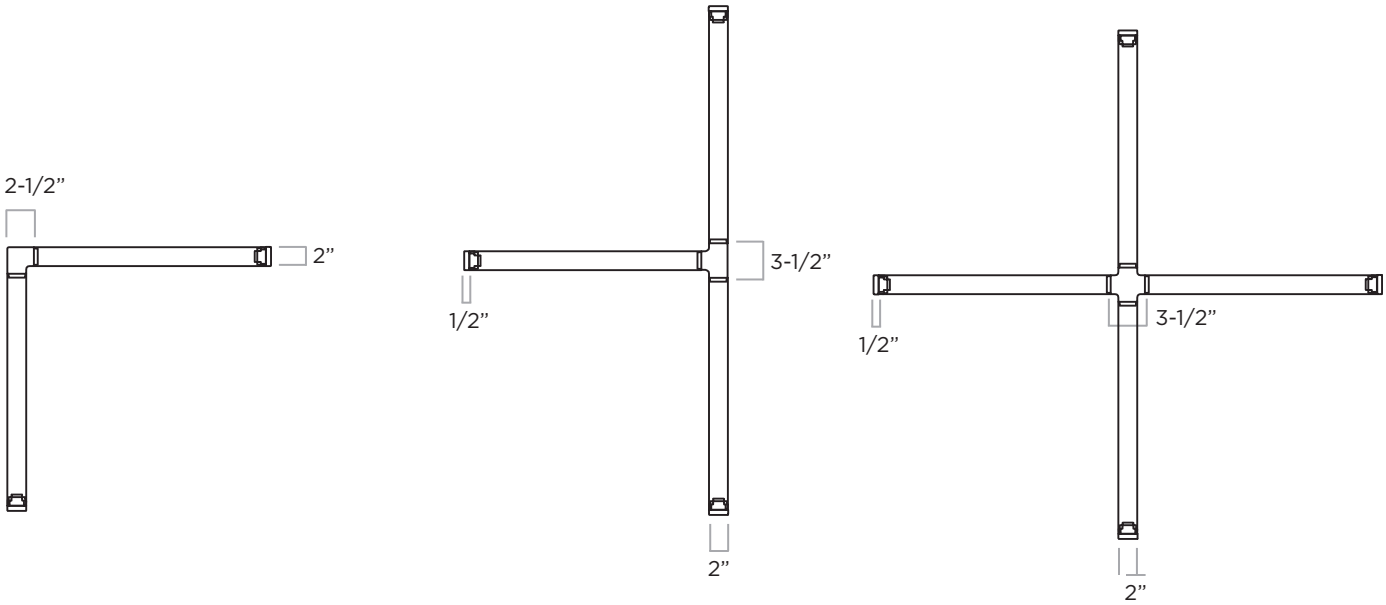

Maximum Panel Run - Recommended Guidelines

Panel runs need wall starts or wing panels for stability. Exceeding the recommended guidelines shown below may result in unstable panel configurations. Panels that are not properly supported will **yield** when pressure is applied.

Freestanding

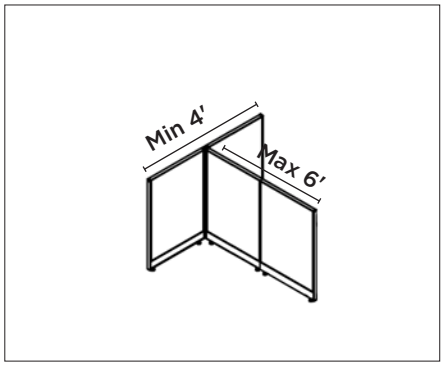

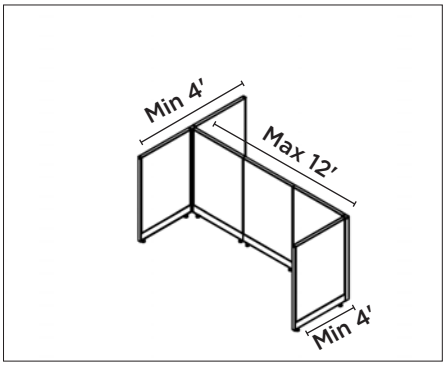

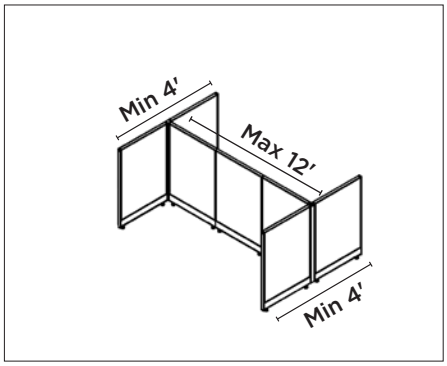

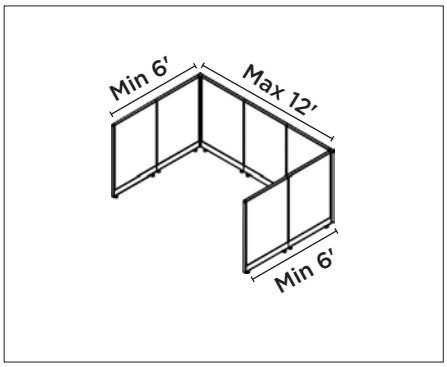

Freestanding with Components

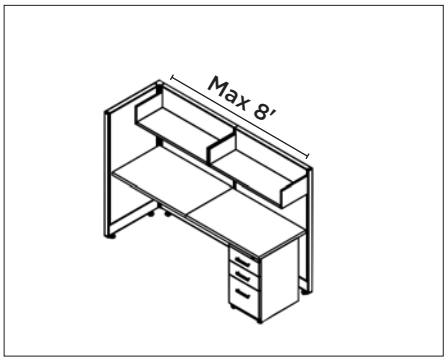

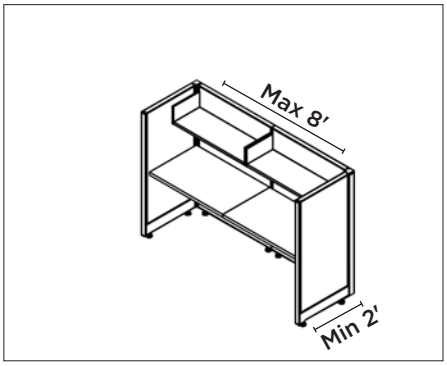

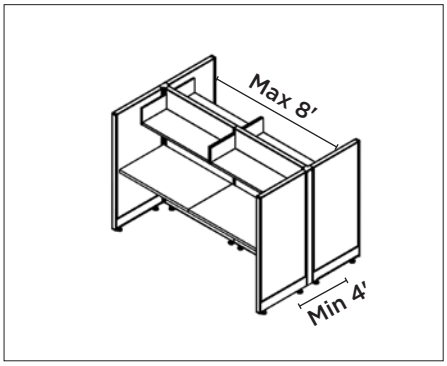

Wall Start

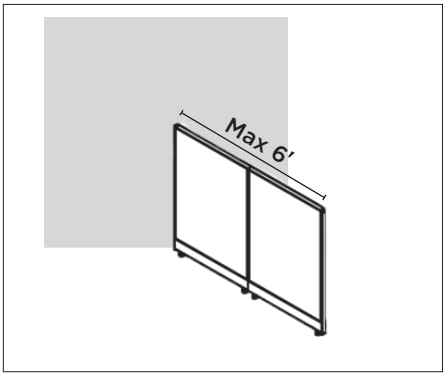

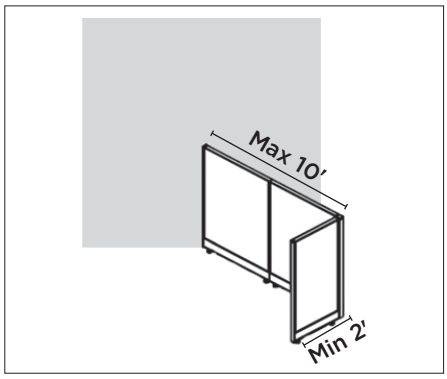

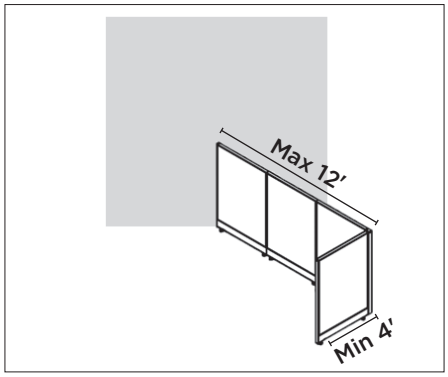

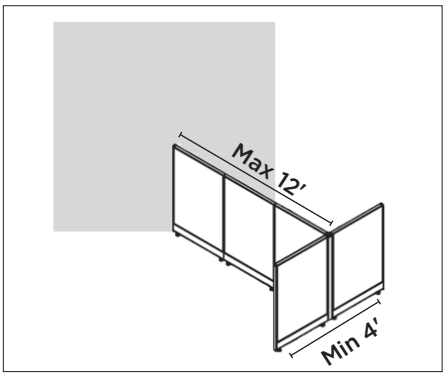

Wall Start with Components

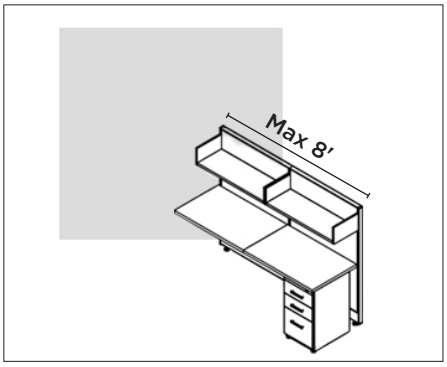

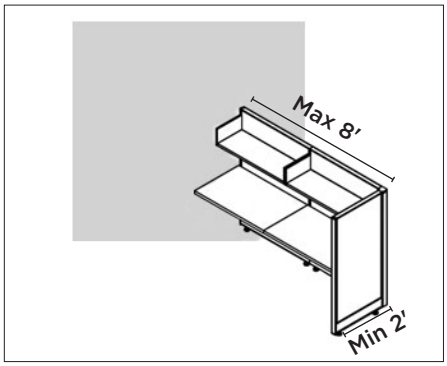

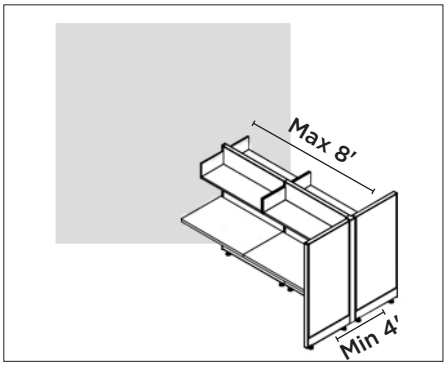

Festoons

Festoons connect powered panels in a straight line or through connectors. All Novo powered panels will come with a panel to panel festoon, which extends power in a straight line from panel to panel. Because these are included, there is no need to order them separately.
Festoons will only need to be ordered separately when bringing power across a connector. Novo uses two different festoon sizes to achieve different connections. Please see below for details and specify festoons on page 38

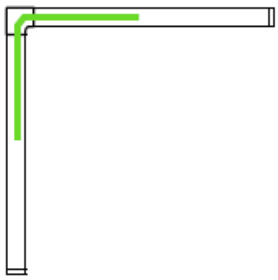

90° Angle Festoon

- Part number Q1FHCPK.90 on page 38
- Extends power at a 90 degree angle through a 2-way, 3-way, or 4-way connector

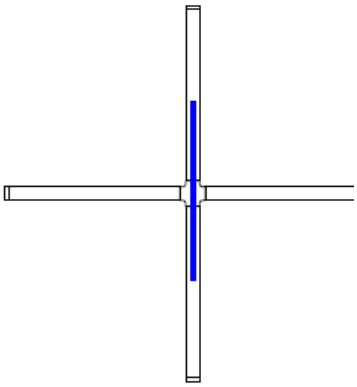

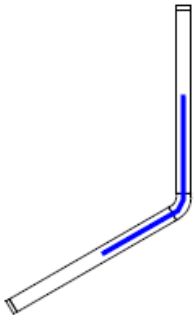

Panel Through Post Festoon

- Part number Q1FHCPK.1 on page 38
- Extends power in a straight line through 90 ° 3-way or 4-way connector.
- Extends power through a 135° or 120° 2-way or 3-way connector.

Festoons

All Panels Powered

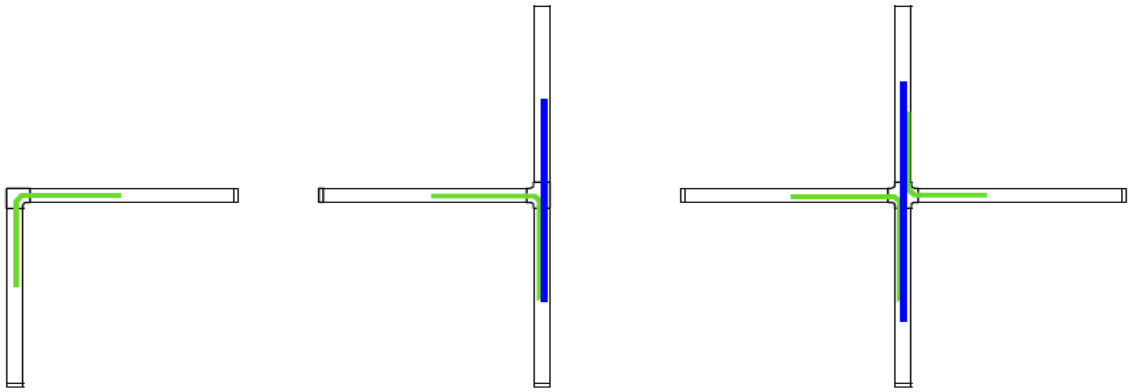

(1) Q1FHCPK.90

(1) Q1FHCPK.90
(1) Q1FHCPK.1

(2) Q1FHCPK.90
(1) Q1FHCPK.1

Spine Power Only

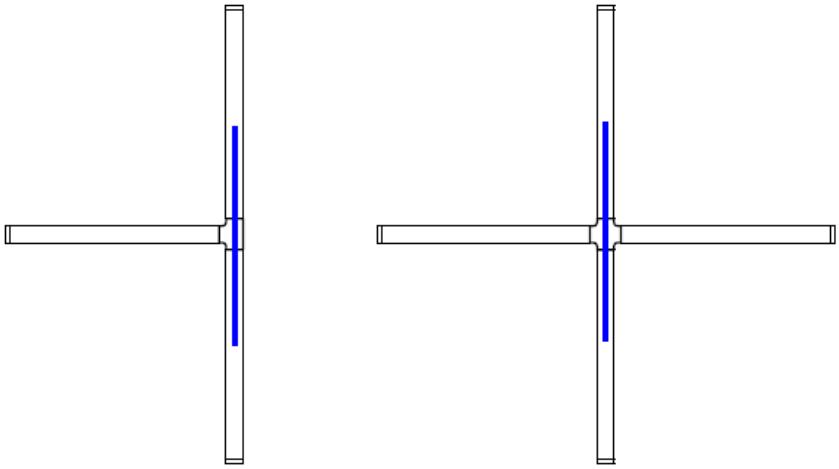

(1) Q1FHCPK.1

(1) Q1FHCPK.1

135 ° and 120 °

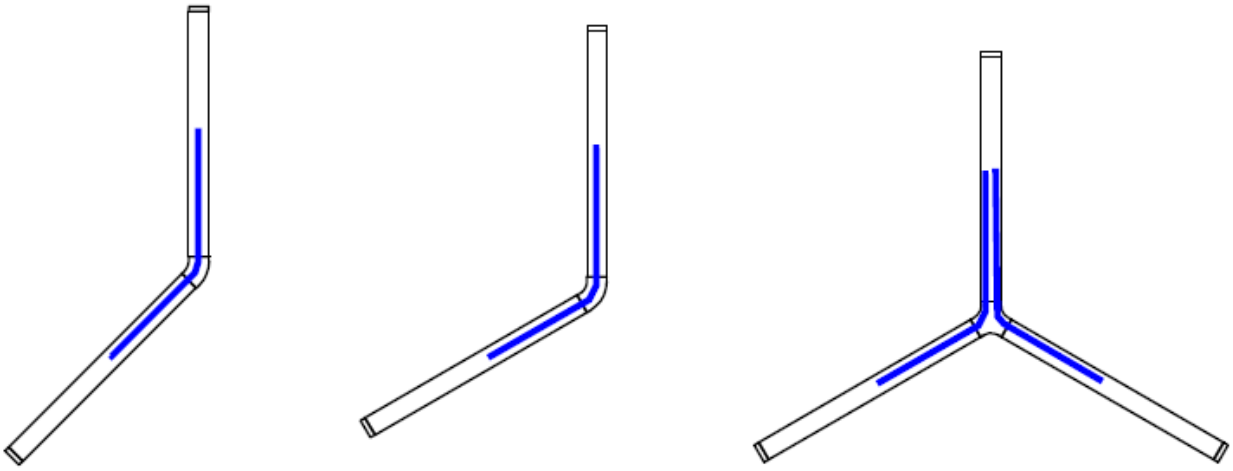

(1) Q1FHCPK.1

(1) Q1FHCPK.1

(2) Q1FHCPK.1

Transaction Support

- Transaction tops with cutouts are used at the lower height at a change of height. The cutout accommodates the change of height trim. Specify transaction tops on page 88-89.
- The taller top does not need a cutout
- Novo Transaction supports do not need to be specified separately. Attachment hardware is included

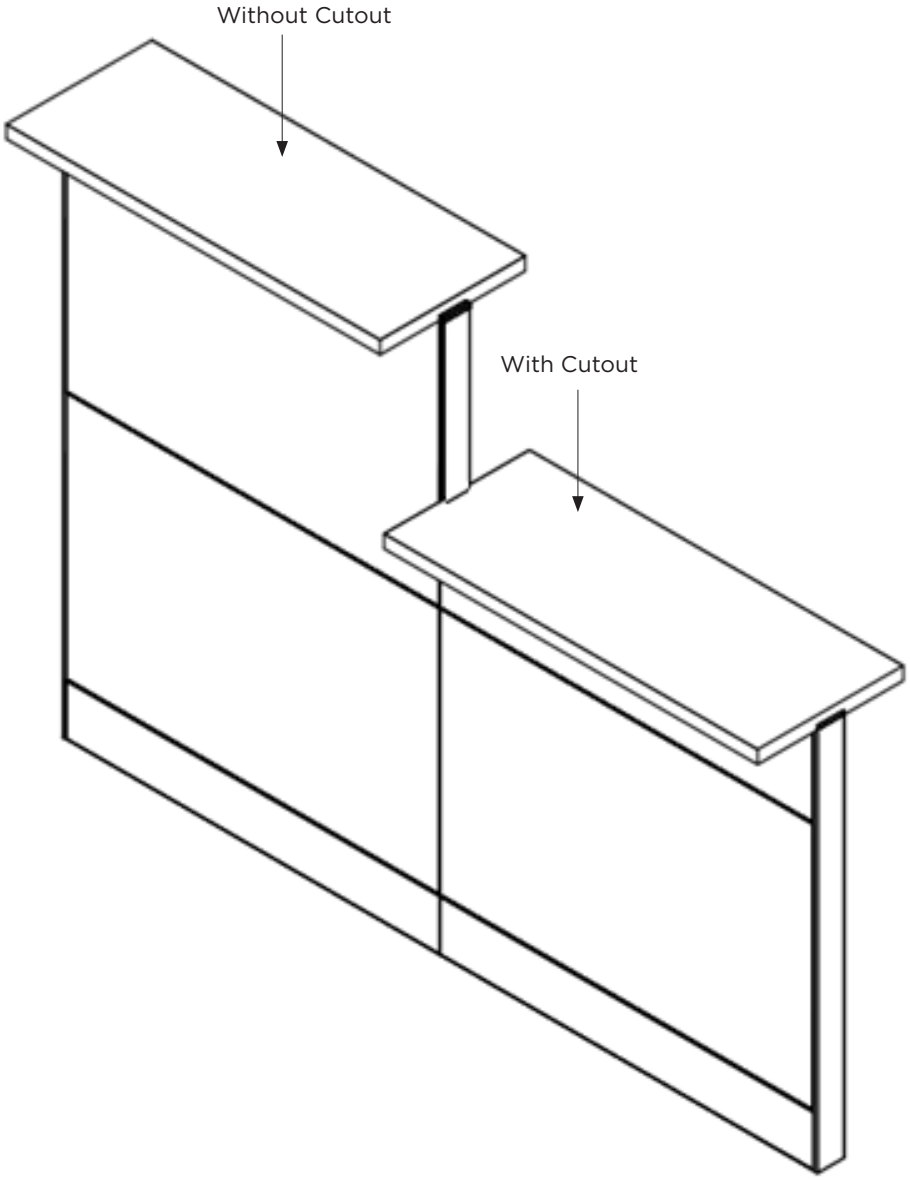

Grommet Locations

1 Select a My-Hite worksurface

My-Hite tops offer optional grommets. (Please use the codes shown when specifying location of grommets).

Choose	Specify Part #	Specify worksurface and edge
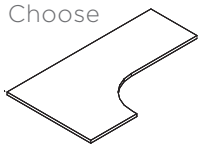	FCCAHS-24366024R	M15 Mousse E18 Mousse

2a Select a grommet location (Straight & extended corner 90° tops)

Specify location by using the two letter code.

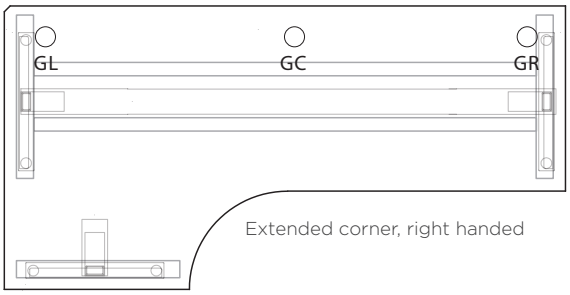

Extended corner, right handed

CODE	POSITION
GL	4" from left side - 4" from rear
GR	4" from right side - 4" from rear
GC	Centered from side to side - 4" from rear

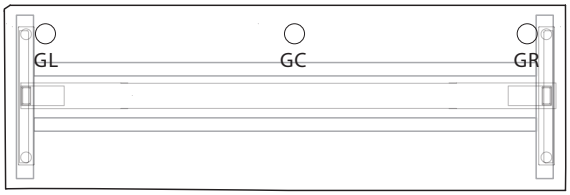

straight

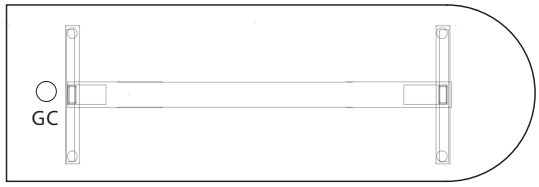

D-shaped

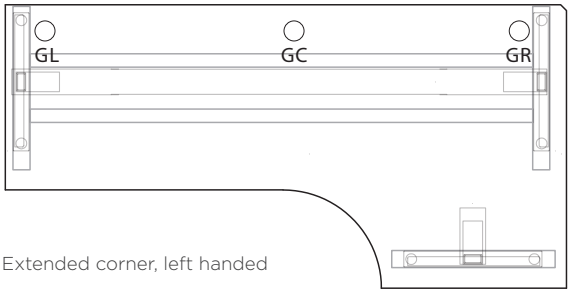

Extended corner, left handed

Dimensions are measured from grommet center

For other grommet locations, please call Friant customer service.

Grommets are 3" round with cover standard

Please Note: Only the GC location is available on the D-Shaped worksurface.

Base position will vary with 72", 78" and 84" worksurface length.

2b Select a grommet location, 120° Tops

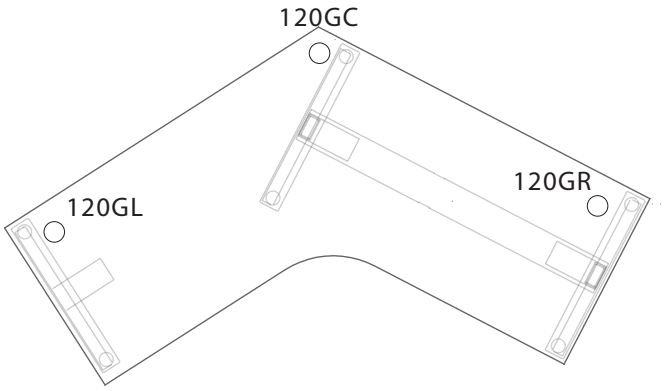

CODE	POSITION
120GL	4" from left side - 4" from rear
120GR	4" from right side - 4" from rear
120GC	Centered from side to side - 4" from rear

Dimensions are measured from grommet center

For other grommet locations, please call Friant customer service.

Grommets are 3" round with cover standard

2c Select a grommet location, 90° Equal Corners

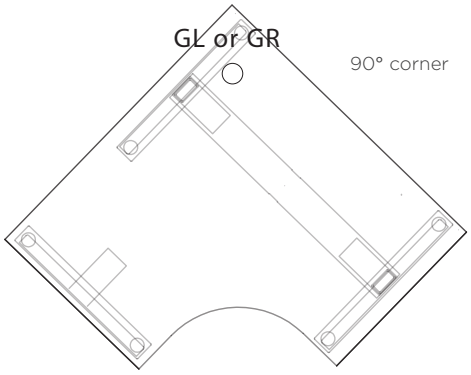

CODE	POSITION
GL or GR	4" from from corner

Dimensions are measured from grommet center

For other grommet locations, please call Friant customer service.

Grommets are 3" round with cover standard

Fabric-Covered Panel

Non-Electrical

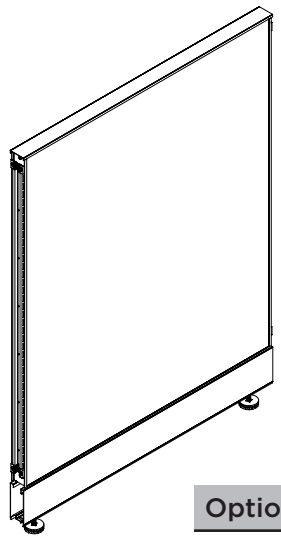

DESCRIPTION

Structural panel with fabric surfaces, painted top caps and trim, leveling glides, and cable management side covers.

SPECIFICATION OPTIONS

product #: See charts below
finish: See page 9
fabric (side 1): See page 7
fabric (side 2): See page 7

ORDER EXAMPLE

product #: Q1FHFAPA.3924N
finish: DT
laminate (side 1): Silky/Natural PF401-1
laminate (side 2): Silky/Natural PF401-1

Options/Notes

- Order connectors and finished ends separately
- Standard fabric application for panels is Non-Directional. Specify Group 5 for Directional application.

39″ HIGH

PART #	HEIGHT	WIDTH	DEPTH	PRICE	GROUP 5 UPCHARGE
Q1FHFAPA.3924N	39″	24″	2″	$413	$42
Q1FHFAPA.3930N	39″	30″	2″	$449	$46
Q1FHFAPA.3936N	39″	36″	2″	$504	$50
Q1FHFAPA.3942N	39″	42″	2″	$529	$54
Q1FHFAPA.3948N	39″	48″	2″	$553	$56

47″ HIGH

PART #	HEIGHT	WIDTH	DEPTH	PRICE	GROUP 5 UPCHARGE
Q1FHFAPA.4724N	47″	24″	2″	$435	$44
Q1FHFAPA.4730N	47″	30″	2″	$483	$48
Q1FHFAPA.4736N	47″	36″	2″	$548	$56
Q1FHFAPA.4742N	47″	42″	2″	$603	$60
Q1FHFAPA.4748N	47″	48″	2″	$621	$62

53″ HIGH

PART #	HEIGHT	WIDTH	DEPTH	PRICE	GROUP 5 UPCHARGE
Q1FHFAPA.5324N	53″	24″	2″	$444	$44
Q1FHFAPA.5330N	53″	30″	2″	$500	$50
Q1FHFAPA.5336N	53″	36″	2″	$580	$58
Q1FHFAPA.5342N	53″	42″	2″	$623	$62
Q1FHFAPA.5348N	53″	48″	2″	$662	$66

67″ HIGH

PART #	HEIGHT	WIDTH	DEPTH	PRICE	GROUP 5 UPCHARGE
Q1FHFAPA.6724N	67″	24″	2″	$511	$52
Q1FHFAPA.6730N	67″	30″	2″	$570	$58
Q1FHFAPA.6736N	67″	36″	2″	$654	$66
Q1FHFAPA.6742N	67″	42″	2″	$696	$70
Q1FHFAPA.6748N	67″	48″	2″	$739	$74

Fabric-Covered Panel

Electrical

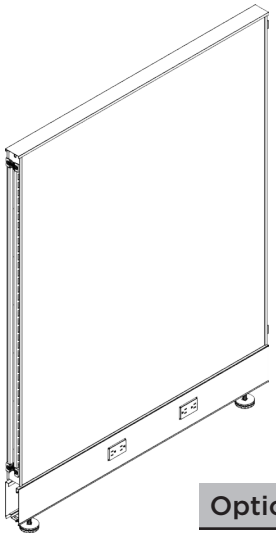

DESCRIPTION

Structural panel with fabric surfaces, painted top caps and trim, leveling glides, 4-circuit power installed in cable management raceway covers.

SPECIFICATION OPTIONS

product #: See charts below
finish: See page 9
laminate (side 1): See page 7
laminate (side 2): See page 7

ORDER EXAMPLE

product #: Q1FHFAPA.3924E
finish: DT
laminate (side 1): Silky/Natural PF401-1
laminate (side 2): Silky/Natural PF401-1

Options/Notes

- 24” wide panels have one receptacle per side
- 30” to 48” wide panels have two receptacle locations per side
- Order receptacles separately
- Includes panel to panel festoon
- Order panel through post festoon separately
- Order connectors and finished ends separately
- Standard fabric application for panels is Non-Directional. Specify Group 5 for Directional application.

39″ HIGH

PART #	HEIGHT	WIDTH	DEPTH	PRICE	GROUP 5 UPCHARGE
Q1FHFAPA.3924E	39″	24″	2″	$566	$58
Q1FHFAPA.3930E	39″	30″	2″	$601	$60
Q1FHFAPA.3936E	39″	36″	2″	$656	$66
Q1FHFAPA.3942E	39″	42″	2″	$682	$68
Q1FHFAPA.3948E	39″	48″	2″	$706	$72

47″ HIGH

PART #	HEIGHT	WIDTH	DEPTH	PRICE	GROUP 5 UPCHARGE
Q1FHFAPA.4724E	47″	24″	2″	$589	$60
Q1FHFAPA.4730E	47″	30″	2″	$636	$64
Q1FHFAPA.4736E	47″	36″	2″	$700	$70
Q1FHFAPA.4742E	47″	42″	2″	$757	$76
Q1FHFAPA.4748E	47″	48″	2″	$774	$78

53″ HIGH

PART #	HEIGHT	WIDTH	DEPTH	PRICE	GROUP 5 UPCHARGE
Q1FHFAPA.5324E	53″	24″	2″	$597	$60
Q1FHFAPA.5330E	53″	30″	2″	$653	$66
Q1FHFAPA.5336E	53″	36″	2″	$733	$74
Q1FHFAPA.5342E	53″	42″	2″	$776	$78
Q1FHFAPA.5348E	53″	48″	2″	$816	$82

67″ HIGH

PART #	HEIGHT	WIDTH	DEPTH	PRICE	GROUP 5 UPCHARGE
Q1FHFAPA.6724E	67″	24″	2″	$664	$66
Q1FHFAPA.6730E	67″	30″	2″	$723	$72
Q1FHFAPA.6736E	67″	36″	2″	$808	$82
Q1FHFAPA.6742E	67″	42″	2″	$849	$86
Q1FHFAPA.6748E	67″	48″	2″	$892	$90

Partial Glazed Fabric Covered Panel

Non-Electrical

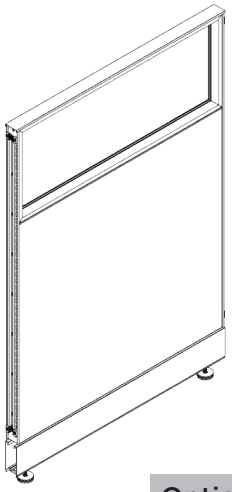

DESCRIPTION

Structural panel with fabric covered lower surfaces and 14" high tempered glass top section, painted top cap and cable management side covers.

SPECIFICATION OPTIONS

product #: See charts below
finish: See page 9
panel glazing: TR Clear
fabric (side 1): See page 7
fabric (side 2): See page 7

ORDER EXAMPLE

product #: Q1FHPGPA.5324N
finish: DT
panel glazing: TR Clear
fabric (side 1): Silky/Natural PF401-1
fabric (side 2): Silky/Natural PF401-1

Options/Notes

- Order connectors and finished ends separately.
- Cannot be used as dry erase surface.
- Standard fabric application for panels is Non-Directional. Specify Group 5 for Directional application.

53" HIGH

PART #	HEIGHT	WIDTH	DEPTH	PRICE	GROUP 5 UPCHARGE
Q1FHPGPA.5324N	53"	24"	2"	$662	$66
Q1FHPGPA.5330N	53"	30"	2"	$718	$72
Q1FHPGPA.5336N	53"	36"	2"	$861	$86
Q1FHPGPA.5342N	53"	42"	2"	$904	$90
Q1FHPGPA.5348N	53"	48"	2"	$987	$100

67" HIGH

PART #	HEIGHT	WIDTH	DEPTH	PRICE	GROUP 5 UPCHARGE
Q1FHPGPA.6724N	67"	24"	2"	$728	$74
Q1FHPGPA.6730N	67"	30"	2"	$787	$80
Q1FHPGPA.6736N	67"	36"	2"	$935	$94
Q1FHPGPA.6742N	67"	42"	2"	$976	$98
Q1FHPGPA.6748N	67"	48"	2"	$1,064	$106

Partial Glazed Fabric Covered Panel

Electrical

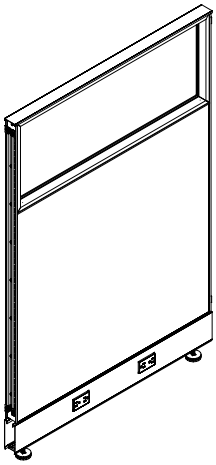

DESCRIPTION

Structural panel with fabric covered lower surfaces and 14" high tempered glass top section, painted top cap and leveling glides, 4-circuit power installed in cable management raceway covers.

SPECIFICATION OPTIONS

product #: See charts below
finish: See page 9
panel glazing: TR Clear
fabric (side 1): See page 7
fabric (side 2): See page 7

ORDER EXAMPLE

product #: Q1FHPGPA.5324E
finish: DT
panel glazing: TR Clear
fabric (side 1): Silky/Natural PF401-1
fabric (side 2): Silky/Natural PF401-1

Options/Notes

- 24" wide panels have one receptacle per side.
- 30" to 48" wide panels have two receptacle locations per side.
- Includes panel to panel festoon.
- Order connectors and finished ends separately.
- Order panel through post festoon separately.
- Cannot be used as dry erase surface
- Standard fabric application for panels is Non-Directional. Specify Group 5 for Directional application

53" HIGH

PART #	HEIGHT	WIDTH	DEPTH	PRICE	GROUP 5 UPCHARGE
Q1FHPGPA.5324E	53"	24"	2"	$816	$82
Q1FHPGPA.5330E	53"	30"	2"	$871	$88
Q1FHPGPA.5336E	53"	36"	2"	$1,013	$102
Q1FHPGPA.5342E	53"	42"	2"	$1,057	$106
Q1FHPGPA.5348E	53"	48"	2"	$1,139	$114

67" HIGH

PART #	HEIGHT	WIDTH	DEPTH	PRICE	GROUP 5 UPCHARGE
Q1FHPGPA.6724E	67"	24"	2"	$883	$88
Q1FHPGPA.6730E	67"	30"	2"	$942	$94
Q1FHPGPA.6736E	67"	36"	2"	$1,088	$110
Q1FHPGPA.6742E	67"	42"	2"	$1,129	$114
Q1FHPGPA.6748E	67"	48"	2"	$1,217	$122

Draw Rod

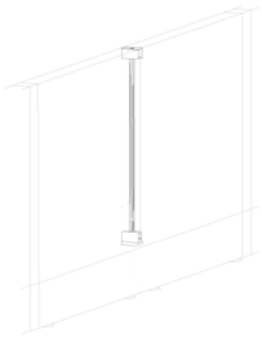

DESCRIPTION

Panel hardware to connect two panels in a straight line.

SPECIFICATION OPTIONS

product #: See charts below

ORDER EXAMPLE

product #: Q1FDR.34

Options/Notes

- When connecting panels of different heights to each other, order draw rod change of height
- Draw rods are 5” shorter than the panel height

FOR SAME HEIGHT

PART #	HEIGHT	WIDTH	DEPTH	PRICE
Q1FDRSH.34	34″	-	-	$24
Q1FDRSH.42	42″	-	-	$24
Q1FDRSH.48	48″	-	-	$25
Q1FDRSH.62	62″	-	-	$25

NOTES

- Rod and block assembly connects two panels of the same height

FOR WALL START/POWER POLE

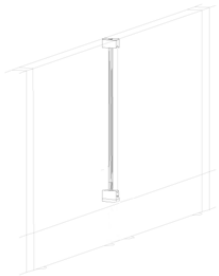

PART #	HEIGHT	WIDTH	DEPTH	PRICE
Q1FDR.34	34″	-	-	$24
Q1FDR.42	42″	-	-	$24
Q1FDR.48	48″	-	-	$25
Q1FDR.62	62″	-	-	$25

NOTES

- Rod and block assembly for use at wall start or power pole installed at end of run.

DRAW ROD, CHANGE OF HEIGHT

PART #	HEIGHT	WIDTH	DEPTH	PRICE
Q1FHDRCHS.34	34″	-	-	$39
Q1FHDRCHS.42	42″	-	-	$39
Q1FHDRCHS.48	48″	-	-	$45

NOTES

- Rod and block assembly connects two panels at 180° (straight line) when the panels are of different height.
- Order the height of the shorter panel.

2-Way Connector Post

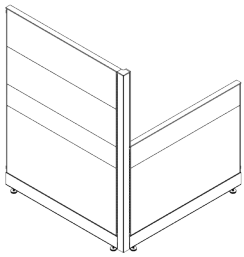

DESCRIPTION

Panel hardware to connect 2panels.

SPECIFICATION OPTIONS

product #: See charts below
finish: See page 9

ORDER EXAMPLE

product #: Q1FH2W.39
finish: DT Dark Tone

Options/Notes

- Includes connector top cap
- When connecting panels of different heights, specify the connector to match the tallest panel.
- For panels that do not match the height of the connector, order Finished End Change of Height separately

90° CONNECTOR POST

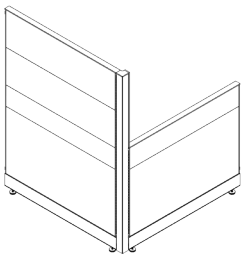

PART #	HEIGHT	WIDTH	DEPTH	PRICE
Q1FH2W.39	39″	3.5″	3.5″	$141
Q1FH2W.47	47″	3.5″	3.5″	$158
Q1FH2W.53	53″	3.5″	3.5″	$167
Q1FH2W.67	67″	3.5″	3.5″	$182

NOTES

- Connects 2 panels at 90°
- When connecting panels of different heights, specify the connector to match the tallest panel.
- For panels that do not match the height of the connector, order Finished End Change of Height separately

3-Way Connector Post

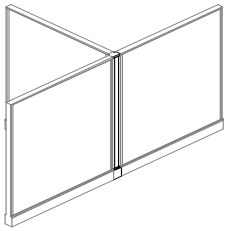

DESCRIPTION

Panel hardware to connect 3 panels.

SPECIFICATION OPTIONS

product #: See charts below
finish: See page 9

ORDER EXAMPLE

product #: **Q1FH3W.39**
finish: DT Dark Tone

Options/Notes

- Includes connector top cap

90° CONNECTOR POST

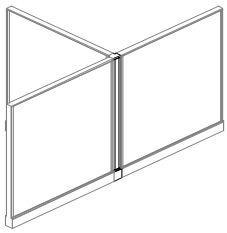

PART #	HEIGHT	WIDTH	DEPTH	PRICE
Q1FH3W.39	39″	3.5″	3.5″	$162
Q1FH3W.47	47″	3.5″	3.5″	$186
Q1FH3W.53	53″	3.5″	3.5″	$203
Q1FH3W.67	67″	3.5″	3.5″	$242

NOTES

- Connects 3 panels at 90°.
- Includes cable management trim cover and top cap
- When connecting panels of different heights, specify the connector to match the tallest panel.
- For panels that do not match the height of the connector, order Finished End Change of Height separately

4-Way Connector Post

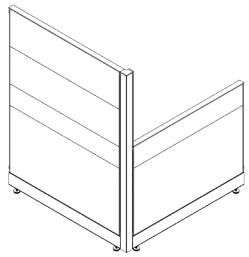

DESCRIPTION

Panel hardware to connect 4 panels.

SPECIFICATION OPTIONS

product #: See charts below
finish: See page 9

ORDER EXAMPLE

product #: **Q1FH4W.39**
finish: DT Dark Tone

Options/Notes

- Includes connector top cap

90° CONNECTOR POST

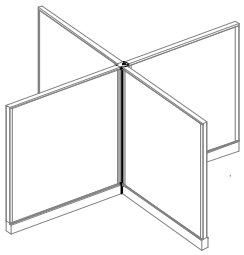

PART #	HEIGHT	WIDTH	DEPTH	PRICE
Q1FH4W.39	39″	3.5″	3.5″	$164
Q1FH4W.47	47″	3.5″	3.5″	$200
Q1FH4W.53	53″	3.5″	3.5″	$211
Q1FH4W.67	67″	3.5″	3.5″	$283

NOTES

- Connects 4 panels at 90°.
- Includes top cap
- When connecting panels of different heights, specify the connector to match the tallest panel.
- For panels that do not match the height of the connector, order Finished End Change of Height separately

Finished End

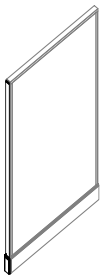

DESCRIPTION

Finished end.

SPECIFICATION OPTIONS

product #: See charts below
finish: See page 9

ORDER EXAMPLE

product #: **Q1FHFE.39**
finish: DT Dark Tone

Options/Notes

- N/A

FINISHED END

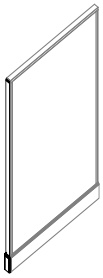

PART #	HEIGHT	WIDTH	DEPTH	PRICE
Q1FHFE.39	39″	3.5″	1″	$64
Q1FHFE.47	47″	3.5″	1″	$72
Q1FHFE.53	53″	3.5″	1″	$76
Q1FHFE.67	67″	3.5″	1″	$86

NOTES

- Finishes the vertical end of a panel at the end of a panel run.
- Includes the cable management trim cover.

Finished End, Change of Height

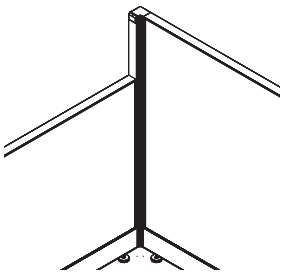

DESCRIPTION

Finished end change of height.

SPECIFICATION OPTIONS

product #: See charts below
finish: See page 9

ORDER EXAMPLE

product #: **Q1FHFECH.6**
finish: DT Dark Tone

Options/Notes

- N/A

FOR CONNECTOR

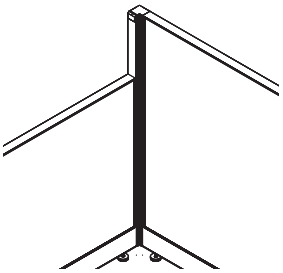

PART #	HEIGHT	WIDTH	DEPTH	PRICE
Q1FHFECH.6	6″	1.75″	.25″	$76
Q1FHFECH.8	8″	1.75″	.25″	$76
Q1FHFECH.14	14″	1.75″	.25″	$76
Q1FHFECH.20	20″	1.75″	.25″	$76
Q1FHFECH.28	28″	1.75″	.25″	$76

NOTES

- Finishes the exposed end of a connector at a change of height location.
- Includes finished end trim and mounting hardware.

FOR PANEL TO PANEL

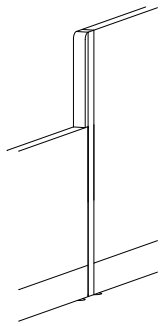

PART #	HEIGHT	WIDTH	DEPTH	PRICE
Q1FHFECHS.6	6″	1.75″	.25″	$76
Q1FHFECHS.8	8″	1.75″	.25″	$76
Q1FHFECHS.14	14″	1.75″	.25″	$76
Q1FHFECHS.20	20″	1.75″	.25″	$76
Q1FHFECHS.28	28″	1.75″	.25″	$76

NOTES

- Finishes the exposed end of a panel at a change of height location.
- Includes finished end trim and mounting hardware.

Wall Connectors

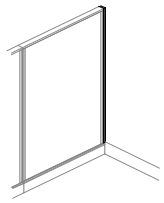

DESCRIPTION

Attaches to wall.

SPECIFICATION OPTIONS

product #: See charts below
finish: See page 9

ORDER EXAMPLE

product #: **Q1FWSTA.34**
finish: DT Dark Tone

Options/Notes

- N/A

WALL START

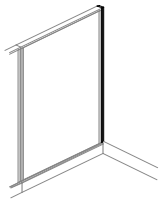

PART #	HEIGHT	WIDTH	DEPTH	PRICE
Q1FWSTA.34	34″	1.75″	1″	$52
Q1FWSTA.42	42″	1.75″	1″	$59
Q1FWSTA.48	48″	1.75″	1″	$66
Q1FWSTA.62	62″	1.75″	1″	$74

NOTES

- Connects panel to structural wall or column. Can also connect equal height panels at a 90° angle at any point along the panel width.
- Order one additional draw rod of the same height.

WALL STRIP

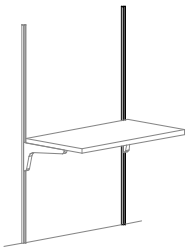

PART #	HEIGHT	WIDTH	DEPTH	PRICE
Q1FWSST.60	60″	-	-	$63
Q1FWSST.72	72″	-	-	$72
Q1FWSST.84	84″	-	-	$88

NOTES

- Attaches to structural wall to hang worksurfaces and/or components.
- Includes one wall strip.

Electrical Distribution

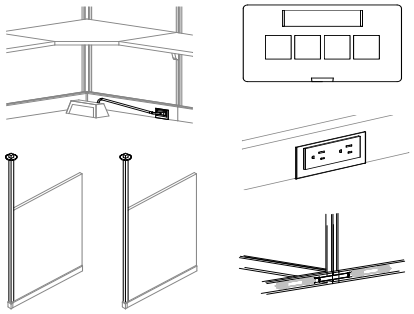

DESCRIPTION

Parts for distributing power through your system. Distributes up to four 20-amp circuits.

SPECIFICATION OPTIONS

product #: See charts below

ORDER EXAMPLE

product #: Q1FHBPE

Options/Notes

- 4-circuit

BASE POWER ENTRY

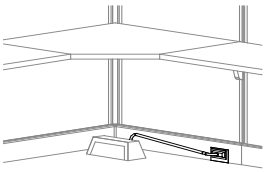

PART #	HEIGHT	WIDTH	DEPTH	PRICE
Q1FHBPE	L angle ellbow	6′	-	$327

NOTES

- Connects building power from a wall, floor or column to the base of a panel.
- Plugs directly into the panel's electrical harness at receptacle location.
- Basefeed is approx 6 1/2 feet long
- Distributes up to four 20-amp circuits.
- Includes a cable that can be field-cut to the appropriate length.
- MUST BE WIRED BY A LICENSED ELECTRICIAN.

CEILING POWER ENTRY

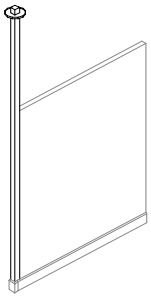

PART #	HEIGHT	WIDTH	DEPTH	PRICE
Q1FHCPE.39	39″	3.5″	3.5″	$692
Q1FHCPE.47	47″	3.5″	3.5″	$692
Q1FHCPE.53	53″	3.5″	3.5″	$692
Q1FHCPE.67	67″	3.5″	3.5″	$692

NOTES

- Connects a ceiling electrical supply to the base of a powered panel. Distributes up to four 20-amp circuits. Attaches to the end of a panel run, or to a 3 or 4-way 90° connector. To attach the Power Pole at the end of a panel run, order a Draw Rod separately.
- Infeed is approx 14 1/2 feet long.
- **To attach at a:**
  - 2-Way connection point, order a 3-Way connector
  - 3-Way connection point, order a 4-Way connector
- Includes a rigid conduit and conduit connector, factory installed power harness, 12' pole, bezel and end cap trim cover.
- Available in MT, DT and CW only.
- MUST BE WIRED BY A LICENSED ELECTRICIAN

CEILING DATA ENTRY

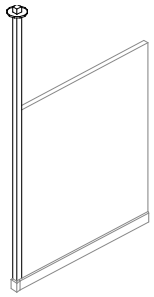

PART #	HEIGHT	WIDTH	DEPTH	PRICE
Q1FHCDE.39	39″	3.5″	3.5″	$312
Q1FHCDE.47	47″	3.5″	3.5″	$312
Q1FHCDE.53	53″	3.5″	3.5″	$312
Q1FHCDE.67	67″	3.5″	3.5″	$312

NOTES

- Routes data/telecommunication cables from the ceiling to the base of a panel. Attaches to the end of a panel run, to a 3 or 4-Way 90° connector. To attach the Power Pole at the end of a panel run, order a Draw Rod separately.
- To attach at a:
  - 2-Way connection point, order a 3-Way connector
  - 3-Way connection point, order a 4-Way connector
- Includes a 12' pole, bezel, and end cap trim cover.
- Available in MT, DT and CW only.

RECEPTACLES

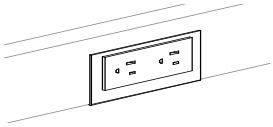

PART #	HEIGHT	WIDTH	DEPTH	PRICE
Q1FHRECP4.I	circuit a	-	-	$27
Q1FHRECP4.II	circuit b	-	-	$27
Q1FHRECP4.III	circuit c	-	-	$27
Q1FHRECP4.IIII	circuit d	dedicated	-	$27
Q1FHRECP4.II-CONT	circuit b	-	-	$27
Q1FHRECP4.III-CONT	circuit c	-	-	$27

NOTES

- Locks into panel base power harness.
- Provides access to I, II, III, or IIII circuit.
- Provides dedicated circuit with "IIII" receptacle.
- Receptacle -CONT are permanently marked CONTROLLED on the face of the receptacle and must be connected to a timer or motion sensor at the infeed location by a licensed electrician in order to comply with California T24

DATA PORT PLATE

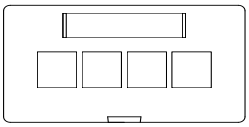

PART #	HEIGHT	WIDTH	DEPTH	PRICE
Q1FHDPP	2.125″	3.625″	0.750″	$45

NOTES

- This Data Port plate is used at the base of a panel in unused duplex cutout to connect computers and/or communication equipment.
- Data jacks should be top feed 90˚ type, not the back feed 180˚ type.
- 4 port locations and comes with 1 blank insert.
- Available in BU, CW or SV finish

DESK MOUNTED POWER UNIT

PART #	PRICE
FPWR.DM	$375

NOTES

- Worksurface mounted power unit
- Includes 3 plugs and 2 USB ports
- Distributes up to 10 amps
- finish: available in BU and CW

FOR PANEL THROUGH POST

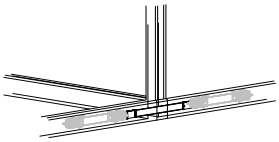

PART #	HEIGHT	WIDTH	DEPTH	PRICE
Q1FHCPK.1	23″	-	-	$88

NOTES

- Extends power in a straight line through 3-Way or 4-Way connector. Extends power through a 120° or 135° 2 or 3 way connector.

FOR 90° ANGLE

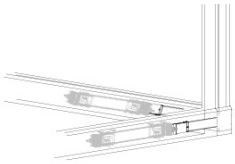

PART #	HEIGHT	WIDTH	DEPTH	PRICE
Q1FHCPK.90	-	-	-	$88

NOTES

- Extends power at a 90° angle through a 2-Way, 3-Way or 4-Way connector.

POWER PANEL CONVERSION KIT

PART #	HEIGHT	WIDTH	DEPTH	PRICE
Q1FHPPCK.24	-	24″	-	$225
Q1FHPPCK.30	-	30″	-	$263
Q1FHPPCK.36	-	36″	-	$289
Q1FHPPCK.42	-	42″	-	$321
Q1FHPPCK.48	-	48″	-	$353

NOTES

- Includes:
  - Power Retro
  - Base Cover with power cutouts
  - Panel to panel festoon
- Order duplex outlets separately.
- Specify base finish: DT, MT, CW
- Order the Power Festoon Through Post if you are converting a non-electrical panel in a straight line through a 3-Way or 4-Way connection.
- Order the Power Festoon 90˚ Angle if you are converting a non-electrical panel at a 90˚ angle through a 2-Way, 3-Way or 4-Way connection.

Standard Worksurfaces

Rectangular

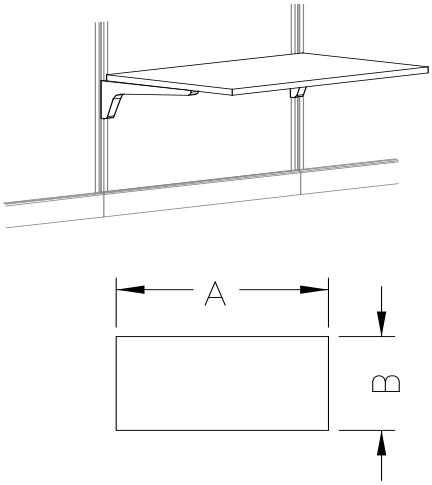

DESCRIPTION

Worksurface hangs from a panel or wall strips. It has a laminate top and a PVC edge. There is a 7/8" gap at the back of the worksurface for plug and cord passage. 60" to 84" worksurfaces have a center support.

SPECIFICATION OPTIONS

product #: See charts below
worksurface finish: See page 9
edge finish: See page 9
support: See page 9

ORDER EXAMPLE

product #: Q1FHERWS.2424L
worksurface finish: M1 Light Maple
edge finish: M1 Light Maple
support: E9 Cloud White

Options/Notes

- Includes cantilever brackets and attachment hardware.

24" DEEP

PART #	HEIGHT	A	B	PRICE	NOTES
Q1FHERWS.2424L	1.25"	24"	24"	$245	• N/A
Q1FHERWS.2430L	1.25"	30"	24"	$282	
Q1FHERWS.2436L	1.25"	36"	24"	$290	
Q1FHERWS.2442L	1.25"	42"	24"	$358	
Q1FHERWS.2448L	1.25"	48"	24"	$366	
Q1FHERWS.2454L	1.25"	54"	24"	$420	
Q1FHERWS.2460L	1.25"	60"	24"	$455	
Q1FHERWS.2466L	1.25"	66"	24"	$510	
Q1FHERWS.2472L	1.25"	72"	24"	$523	

24″ DEEP - CONNECTOR SPANNING

PART #	HEIGHT	A	B	PRICE	NOTES
Q1FHERWS.2424L-3W	1.25″	27.5″	24″	$352	• N/A
Q1FHERWS.2430L-3W	1.25″	33.5″	24″	$388	
Q1FHERWS.2436L-3W	1.25″	39.5″	24″	$397	
Q1FHERWS.2442L-3W	1.25″	45.5″	24″	$463	
Q1FHERWS.2448L-3W	1.25″	51.5″	24″	$473	
Q1FHERWS.2454L-3W	1.25″	57.5″	24″	$526	
Q1FHERWS.2460L-3W	1.25″	63.5″	24″	$562	
Q1FHERWS.2466L-3W	1.25″	69.5″	24″	$616	
Q1FHERWS.2472L-3W	1.25″	75.5″	24″	$628	

30″ DEEP

PART #	HEIGHT	A	B	PRICE	NOTES
Q1FHERWS.3024L	1.25″	24″	30″	$327	• N/A
Q1FHERWS.3030L	1.25″	30″	30″	$373	
Q1FHERWS.3036L	1.25″	36″	30″	$383	
Q1FHERWS.3042L	1.25″	42″	30″	$460	
Q1FHERWS.3048L	1.25″	48″	30″	$470	
Q1FHERWS.3054L	1.25″	54″	30″	$534	
Q1FHERWS.3060L	1.25″	60″	30″	$571	
Q1FHERWS.3066L	1.25″	66″	30″	$638	
Q1FHERWS.3072L	1.25″	72″	30″	$651	

30″ DEEP - CONNECTOR SPANNING

PART #	HEIGHT	A	B	PRICE
Q1FHERWS.3024L-3W	1.25″	27.5″	30″	$433
Q1FHERWS.3030L-3W	1.25″	33.5″	30″	$480
Q1FHERWS.3036L-3W	1.25″	39.5″	30″	$488
Q1FHERWS.3042L-3W	1.25″	45.5″	30″	$565
Q1FHERWS.3048L-3W	1.25″	51.5″	30″	$576
Q1FHERWS.3054L-3W	1.25″	57.5″	30″	$640
Q1FHERWS.3060L-3W	1.25″	63.5″	30″	$678
Q1FHERWS.3066L-3W	1.25″	69.5″	30″	$744
Q1FHERWS.3072L-3W	1.25″	75.5″	30″	$757

NOTES

- N/A

90° Corner

Notched

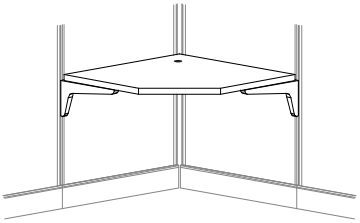

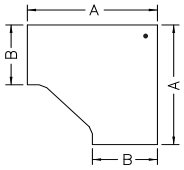

DESCRIPTION

Worksurface hangs from a panel or wall strips. It has a laminate top and a PVC edge. There is a 7/8 ” gap at the back of the worksurface for plug and cord passage. It has 24”D or 30”D connecting sides.

SPECIFICATION OPTIONS

product #: See charts below
worksurface finish: See page 9
edge finish: See page 9
support: See page 9

ORDER EXAMPLE

product #: Q1FHECWS.2436L
worksurface finish: M1 Light Maple
edge finish: M1 Light Maple
support: E9 Cloud White

Options/Notes

- Includes one wire gromment, canitlever brackets, one corner bracket, and attachment hardware.
- *Corners are angled (not available with notched front edge)
- Mending plates are included with rectangular worksurfaces only.
- Order mending plates separately if placing this worksurface next to another non-rectangular worksurface.

90° NOTCHED CORNER

PART #	HEIGHT	A	B	PRICE
Q1FHECWS.2436L	1.25″	*36″	24″	$473
Q1FHECWS.2442L	1.25″	42″	24″	$584
Q1FHECWS.2448L	1.25″	48″	24″	$619
Q1FHECWS.3036L	1.25″	*36″	30″	$525
Q1FHECWS.3042L	1.25″	*42″	30″	$636
Q1FHECWS.3048L	1.25″	48″	30″	$670

NOTES

* Corners are angled (not available with notched front edge)

90° Corner

Curved

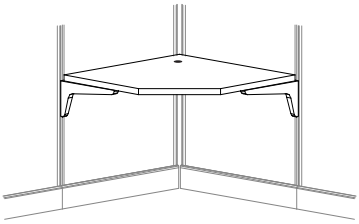

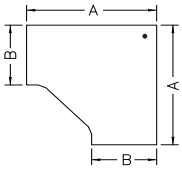

DESCRIPTION

Worksurface hangs from a panel or wall strips. It has a laminate top and a PVC edge. There is a 7/8" gap at the back of the worksurface for plug and cord passage. It has 24"D or 30"D connecting sides.

SPECIFICATION OPTIONS

product #: See charts below
worksurface finish: See page 9
edge finish: See page 9
support: See page 9

ORDER EXAMPLE

product #: Q1FHECCWS.2436L
worksurface finish: M1 Light Maple
edge finish: M1 Light Maple
support: E9 Cloud White

Options/Notes

- Includes one wire gromment, cantilever brackets, one corner bracket, and attachment hardware.
- *Corners are angled (not available with notched front edge)
- Mending plates are included with rectangular worksurfaces only.
- Order mending plates separately if placing this worksurface next to another non-rectangular worksurface.

90° CURVED CORNER

PART #	HEIGHT	A	B	PRICE
Q1FHECCWS.2436L	1.25″	36″	24″	$473
Q1FHECCWS.2442L	1.25″	42″	24″	$584
Q1FHECCWS.2448L	1.25″	48″	24″	$619
Q1FHECCWS.3036L	1.25″	36″	30″	$525
Q1FHECCWS.3042L	1.25″	42″	30″	$636
Q1FHECCWS.3048L	1.25″	48″	30″	$670

NOTES

* N/A

Half Circle

Worksurface

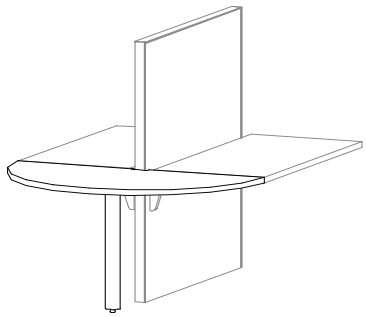

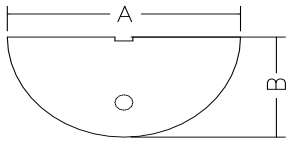

DESCRIPTION

This Half Circle worksurface has a notch and attaches to the end of two back to back rectangular or extended corner worksurfaces, and includes one support column leg. It has a laminate top and a PVC edge.

SPECIFICATION OPTIONS

product #: See charts below
worksurface finish: See page 9
edge finish: See page 9
support: See page 9

ORDER EXAMPLE

product #: Q1FHEHCWS.50L
worksurface finish: M1 Light Maple
edge finish: M1 Light Maple
support: E9 Cloud White

Options/Notes

- Support column leg has a leveling glide and attaching hardware
- Ships knocked down
- Column leg finish matches support.
- Mending plates are included with rectangular worksurfaces only.
- Order mending plates separately if placing this worksurface next to another non-rectangular worksurface.

HALF CIRCLE

PART #	HEIGHT	A	B	PRICE	NOTES
Q1FHEHCWS.50L	29″	52″	26″	$889	
Q1FHEHCWS.60L	29″	60″	32″	$1,003	

D-Shaped

Worksurface

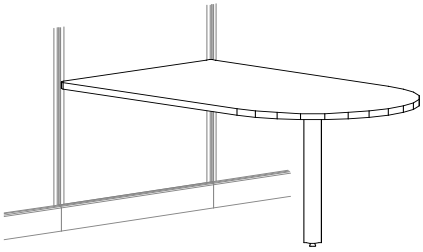

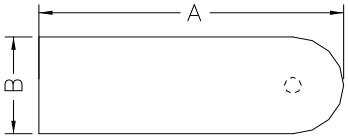

DESCRIPTION

Worksurface hangs from a panel or wall strips. It has a laminate top and a PVC edge. There is a 7/8" gap at the back of the worksurface for plug and cord passage. Includes one support column leg.

SPECIFICATION OPTIONS

product #: See charts below
worksurface finish: See page 9
edge finish: See page 9
support: See page 9

ORDER EXAMPLE

product #: Q1FHEDSP.2448L
worksurface finish: M1 Light Maple
edge finish: M1 Light Maple
support: E9 Cloud White

Options/Notes

- Support column leg has a leveling glide and attaching hardware
- Ships knocked down
- Column leg finish matches support.
- Mending plates are included with rectangular worksurfaces only.
- Order mending plates separately if placing this worksurface next to another non-rectangular worksurface.

D-SHAPED

PART #	HEIGHT	A	B	PRICE
Q1FHEDSP.2448L	29″	48″	24″	$537
Q1FHEDSP.3048L	29″	48″	30″	$587
Q1FHEDSP.2460L	29″	60″	24″	$597
Q1FHEDSP.3060L	29″	60″	30″	$651
Q1FHEDSP.3072L	29″	72″	30″	$712
Q1FHEDSP.3672L	29″	72″	36″	$785

Transaction

Rectangular

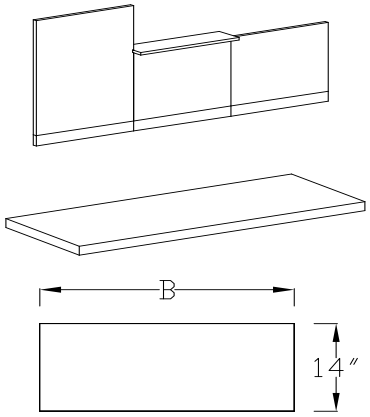

DESCRIPTION

14”D Rectangular transaction worksurface attaches to the top of a panel. Ends are flush with the panel. It has a PVC edge.

SPECIFICATION OPTIONS

product #: See charts below
worksurface finish: See page 9
edge finish: See page 9
support: See page 9

ORDER EXAMPLE

product #: Q1FHERTS.1424LC
worksurface finish: M1 Light Maple
edge finish: M1 Light Maple
support: E9 Cloud White

Options/Notes

- Attaches to the top of a panel for counter or display area.
- Includes transaction brackets and attachment hardware.

RECTANGULAR TRANSACTION

PART #	HEIGHT	A	B	C	D	PRICE	NOTES
Q1FHERTS.1424L	1.25″	14″	24″	-	-	$177	• N/A
Q1FHERTS.1430L	1.25″	14″	30″	-	-	$204	
Q1FHERTS.1436L	1.25″	14″	36″	-	-	$220	
Q1FHERTS.1442L	1.25″	14″	42″	-	-	$263	
Q1FHERTS.1448L	1.25″	14″	48″	-	-	$268	
Q1FHERTS.1460L	1.25″	14″	60″	-	-	$311	
Q1FHERTS.1472L	1.25″	14″	72″	-	-	$353	

RECTANGULAR TRANSACTION AT CHANGE OF HEIGHT

PART #	HEIGHT	A	B	C	D	PRICE	NOTES
Q1FHERTS.1424LC	1.25″	14″	23.5″	-	-	$177	• N/A
Q1FHERTS.1430LC	1.25″	14″	29.5″	-	-	$204	
Q1FHERTS.1436LC	1.25″	14″	35.5″	-	-	$220	
Q1FHERTS.1442LC	1.25″	14″	41.5″	-	-	$263	
Q1FHERTS.1448LC	1.25″	14″	47.5″	-	-	$268	
Q1FHERTS.1460LC	1.25″	14″	59.5″	-	-	$311	
Q1FHERTS.1472LC	1.25″	14″	71.5″	-	-	$353	

Transaction

Corner

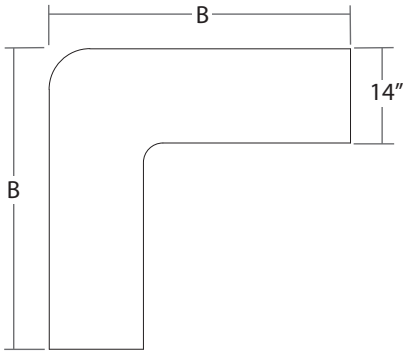

DESCRIPTION

14"D Transaction worksurface attaches to the top of two panels. Ends are flush with the panels. It has a PVC edge.

SPECIFICATION OPTIONS

product #: See charts below
worksurface finish: See page 9
edge finish: See page 9
support finish: See page 9

ORDER EXAMPLE

product #: Q1FHECTS.24
worksurface finish: M1 Light Maple
edge finish: M1 Light Maple
support finish: E9 Cloud White

Options/Notes

- Attaches to the top of two 24", 30", 36", 42" or 48"W.
- Panels connected at a 90° angle for corner counter or display area
- Includes transaction brackets and attachment hardware.

CORNER TRANSACTION

PART #	HEIGHT	A	B	C	D	PRICE
Q1FHECTS.24	1.25"	14"	32"	-	-	$338
Q1FHECTS.30	1.25"	14"	38"	-	-	$449
Q1FHECTS.36	1.25"	14"	44"	-	-	$497
Q1FHECTS.42	1.25"	14"	50"	-	-	$699
Q1FHECTS.48	1.25"	14"	56"	-	-	$704

NOTES

- N/A

Rectangular

Worksurfaces For Use w/ MY-HITE Base

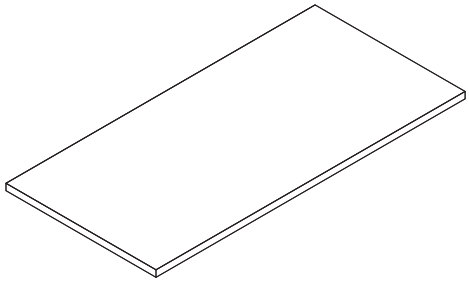

DESCRIPTION

Worksurface top only, for use with height adjustable base within workstation application.

SPECIFICATION OPTIONS

product #: See charts below
worksurface finish: See page 9
edge finish: See page 9
grommet: See page 18

ORDER EXAMPLE

product #: Q1FHRWS.2364
worksurface finish: M1 Light Maple
edge finish: M1 Light Maple
grommet: GC (Rear Center)

Options/Notes

- Add circular grommet (add $75 list) Specify GL, GC, GR
- Order base separately from MY-HITE pricebook
- Note: Top size reduced 1" in depth and 2" in with to fit within system workstation and prevent pinch points. See system pricebook for details. We do not recommend using full size worktop in paneled workstation appplications.

23" DEEP

PART #	HEIGHT	WIDTH	DEPTH	PRICE
Q1FHRWS.2340	-	40"	23"	$307
Q1FHRWS.2346	-	46"	23"	$316
Q1FHRWS.2352	-	52"	23"	$373
Q1FHRWS.2358	-	58"	23"	$383
Q1FHRWS.2364	-	64"	23"	$441
Q1FHRWS.2370	-	70"	23"	$453
Q1FHRWS.2376	-	76"	23"	$553
Q1FHRWS.2382	-	82"	23"	$559

NOTES

- Sizes are actual for example Q1FHRWS.2364 is 23" x 64"

29" DEEP

PART #	HEIGHT	WIDTH	DEPTH	PRICE
Q1FHRWS.2940	-	40"	29"	$363
Q1FHRWS.2946	-	46"	29"	$373
Q1FHRWS.2952	-	52"	29"	$442
Q1FHRWS.2958	-	58"	29"	$453
Q1FHRWS.2964	-	64"	29"	$524
Q1FHRWS.2970	-	70"	29"	$537
Q1FHRWS.2976	-	76"	29"	$660
Q1FHRWS.2982	-	82"	29"	$666

NOTES

- Sizes are actual for example Q1FHRWS.2364 is 23" x 64"

Corner

Worksurfaces For Use w/ MY-HITE Base

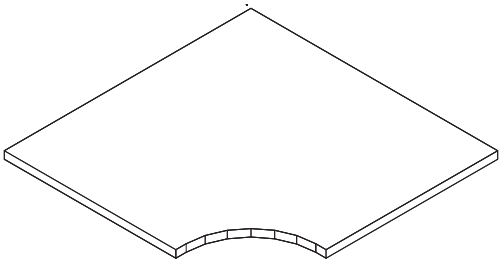

DESCRIPTION

Corner worksurface top only, for use with height adjustable base within workstation application.

SPECIFICATION OPTIONS

product #: See charts below
worksurface finish: See page 9
edge finish: See page 9
grommet: See page 18

ORDER EXAMPLE

product #: Q1FHRWS.2364
worksurface finish: M1 Light Maple
edge finish: M1 Light Maple
grommet: GL

Options/Notes

- Add circular grommet (add $75 list) Specify GL or GR
- Order base separately from MY-HITE pricebook
- Note: Top size reduced 1" in depth and 2" in with to fit within system workstation and prevent pinch points. See system pricebook for details. We do not recommend using full size worktop in paneled workstation appplications.

23″ DEEP

PART #	HEIGHT	WIDTH	DEPTH	PRICE
Q1FHCWS.2340	-	40"	23"	$505
Q1FHCWS.2346	-	46"	23"	$535

NOTES

- Sizes are actual for example Q1FHCWS.2346 is 23" x 46"

29″ DEEP

PART #	HEIGHT	WIDTH	DEPTH	PRICE
Q1FHCWS.2940	-	40"	29"	$550
Q1FHCWS.2946	-	46"	29"	$578

NOTES

- Sizes are actual for example Q1FHCWS.2940 is 29" x 40"

D-Shaped

Worksurfaces For Use with MY-HITE Base

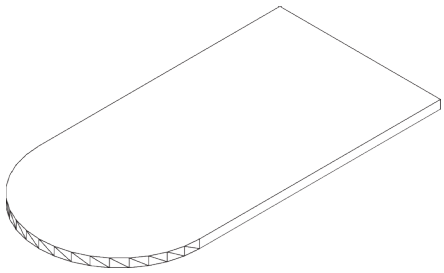

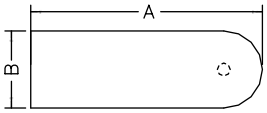

DESCRIPTION

Worksurface top only, for use with height adjustable base within workstation application

SPECIFICATION OPTIONS

product #: See charts below
worksurface finish: See page 9
edge finish: See page 9
grommet: See page 18

ORDER EXAMPLE

product #: Q1FHEDSP.2346
worksurface finish: M1 Light Maple
edge finish: M1 Light Maple
grommet: GC (Rear Center)

Options/Notes

- Add grommet (add $75 list) Specify GL, GC, GR
- Order base separately from MY-HITE pricebook
- Note: Top size reduced 1" in depth and 2" in width to fit within system workstation and prevent pinch points. We do not recommend using full size worktop in paneled workstation appplications.

D-SHAPED

PART #	HEIGHT	A	B	C	D	PRICE
Q1FHEDSP.2346	1.25″	46″	23″	-	-	$463
Q1FHEDSP.2358	1.25″	58″	23″	-	-	$516
Q1FHEDSP.2946	1.25″	46″	29″	-	-	$507
Q1FHEDSP.2958	1.25″	58″	29″	-	-	$562
Q1FHEDSP.2970	1.25″	70″	29″	-	-	$615
Q1FHEDSP.3570	1.25″	70″	35″	-	-	$677

NOTES

- N/A

Square Post Leg

Supports

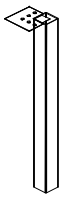

DESCRIPTION

Provides support to the worksurface.

SPECIFICATION OPTIONS

product #: See charts below
support finish: See page 9

ORDER EXAMPLE

product #: Q1FHSPL.2
support finish: CW Cloud White

Options/Notes

- Use with frame and wall strip worksurfaces.

SQUARE POST LEG

PART #	HEIGHT	WIDTH	DEPTH	PRICE
Q1FHSPL.2	27.5″	2″	2″	$95
Q1FHSPL.3	27.5″	3″	3″	$134

NOTES

- Attaches to the underside of a worksurface and has an adjustable glide.
- Specify finish: DT, MT, CW

Support End Panel

Supports

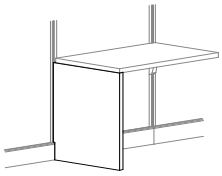

DESCRIPTION

Provides support to the worksurface.

SPECIFICATION OPTIONS

product #: See charts below
support finish: See page 9

ORDER EXAMPLE

product #: Q1FHWSSEP.24-MEL
support finish: CW Cloud White

Options/Notes

- Use with frame and wall strip worksurfaces.

SUPPORT END PANEL, MELAMINE

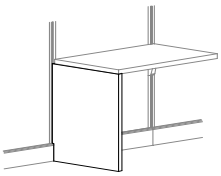

PART #	HEIGHT	WIDTH	DEPTH	PRICE
Q1FHWSSEP.24-MEL	27.75″	1.25”	24″	$349
Q1FHWSSEP.30-MEL	27.75″	1.25”	30″	$390

NOTES

- Attaches to a worksurface and a frame or wall strip.
- Finishes: DT, MT, CW

Square Metal P-Leg

Supports

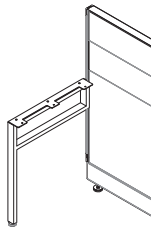

DESCRIPTION

Provides support to the worksurface.

SPECIFICATION OPTIONS

product #: See charts below
support finish: See page 9

ORDER EXAMPLE

product #: Q1FHSMLS.24
support finish: CW Cloud White

Options/Notes

- Use with frame and wall strip worksurfaces.

SQUARE METAL P-LEG, SINGLE SUPPORT

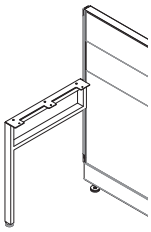

PART #	HEIGHT	WIDTH	DEPTH	PRICE
Q1FHSMLS.24	27.75″	1.25″	24″	$152
Q1FHSMLS.30	27.75″	1.25″	30″	$173

NOTES

- This support attaches to a worksurface and a frame or wall strip. It provides support for a single worksurface.
- To convert from left handed to right handed, remove attachment brackets, and reinstall in the position needed.
- Specify the depth of the worksurface support to match the depth of the worksurface.
- Specify finish: DT, MT, CW

SQUARE METAL P LEG, DOUBLE SUPPORT

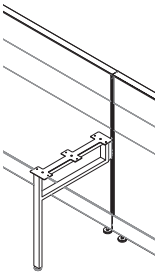

PART #	HEIGHT	WIDTH	DEPTH	PRICE
Q1FHSMLD.24	27.75″	1.25″	24″	$168
Q1FHSMLD.30	27.75″	1.25″	30″	$191

NOTES

- This support attaches to a worksurface and a frame or wall strip. It provides support for two worksurfaces.
- Specify the depth of the worksurface support to match the depth of the worksurface.
- Specify finish: DT, MT, CW

Square Corner, Triangle Shape Leg

Supports

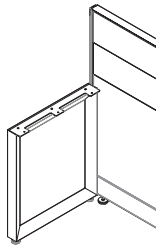

DESCRIPTION

Provides support to the worksurface.

SPECIFICATION OPTIONS

product #: See charts below
support finish: See page 9

ORDER EXAMPLE

product #: Q1FHTMLDS.24
support finish: CW Cloud White

Options/Notes

- Use with frame and wall strip worksurfaces.

SQUARE CORNER, TRIANGLE SHAPE LEG, SINGLE SUPPORT

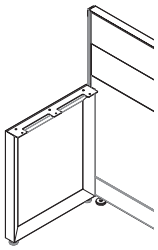

PART #	HEIGHT	WIDTH	DEPTH	PRICE
Q1FHTMLDS.24	27.75″	1.25”	24″	$185
Q1FHTMLDS.30	27.75″	1.25”	30″	$209

NOTES

- This support leg attaches to a worksurface and a frame or wall strip. It provides support for a single worksurface.
- To convert to a left or right support, remove the top bar and reinstall it in the desired position.
- Specify the depth of the support leg to match the depth of the worksurface.
- Includes all attachment hardware.
- Specify finish: DT, MT, CW

SQUARE CORNER, TRIANGLE SHAPE LEG, DOUBLE SUPPORT

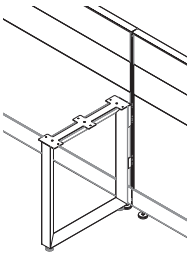

PART #	HEIGHT	WIDTH	DEPTH	PRICE
Q1FHTMLDD.24	27.75″	1.25”	24″	$198
Q1FHTMLDD.30	27.75″	1.25”	30″	$226

NOTES

- This support leg attaches to a worksurface and a frame or wall strip.It provides support for two worksurfaces.
- Specify the depth of the support leg to match the depth of the worksurface.
- Includes all attachment hardware.
- Specify finish: DT, MT, CW

Taper Legs

Supports

DESCRIPTION

Taper Legs for use with the Novo workstation.

SPECIFICATION OPTIONS

product #: See charts below
support finish: CW Cloud White, SV Silver, BU Black Umber

ORDER EXAMPLE

product #: Q1FHATPL.24
support finish: CW Cloud White

Options/Notes

- Systems angled leg.

TAPER LEGS

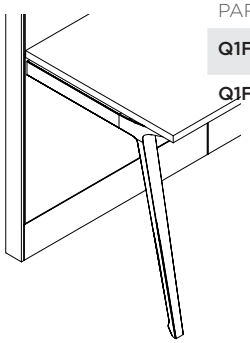

PART #	HEIGHT	WIDTH	DEPTH	PRICE
Q1FHATPL.24	27.5″	-	24”	$529
Q1FHATPL.30	27.5″	-	30”	$540

NOTES

- Attaches to the underside of a worksurface

Inset Legs

Supports

DESCRIPTION

Inset Legs for use with the Novo workstation.

SPECIFICATION OPTIONS

product #: See charts below
support finish: CW Cloud White, SV Silver, BU Black Umber

ORDER EXAMPLE

product #: Q1FHAINL.24
support finish: CW Cloud White

Options/Notes

- Systems angled leg.

INSET LEGS

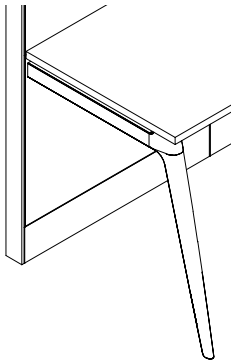

PART #	HEIGHT	WIDTH	DEPTH	PRICE
Q1FHAINL.24	27.5”	-	24”	$446
Q1FHAINL.30	27.5”	-	30”	$456

NOTES

- Attaches to the underside of a worksurface

Corner Bracket

Brackets

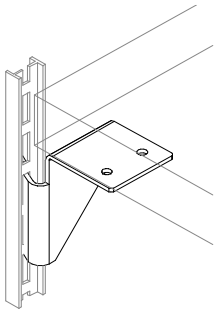

DESCRIPTION

Corner bracket

SPECIFICATION OPTIONS

product #: See charts below

ORDER EXAMPLE

product #: Q1FHWSB.L

Options/Notes

- N/A

CORNER BRACKET

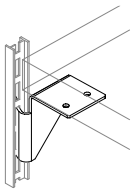

Right Handed shown

PART #	HEIGHT	WIDTH	DEPTH	PRICE
Q1FHWSB.L	2.75″	-	2.5″	$13
Q1FHWSB.R	2.75″	-	2.5″	$13

NOTES

- Attaches to the front corner of a hanging worksurface to provide additional support when the return panel matches the worksurface depth.
- Also used as support for the back corner of a corner worksurface.
- Specify left or right.
- Color: Black

Flat Bracket

Brackets

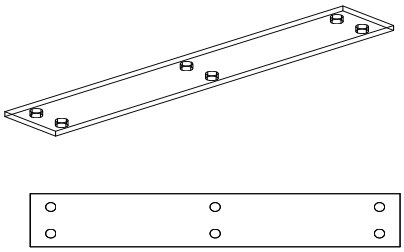

DESCRIPTION

This flat bracket is used to support two worksurfaces when a support leg or panel leg is inappropriate.

SPECIFICATION OPTIONS

product #: See charts below

ORDER EXAMPLE

product #: Q1FHFB.18

Options/Notes

- N/A

FLAT BRACKET

PART #	HEIGHT	A	B	C	D	PRICE	NOTES
Q1FHFB.18	3″	18″	-	-	-	$43	• N/A

Mending Plates

Brackets

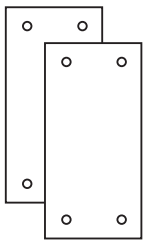

DESCRIPTION

This Mending Plate is to be ordered if you're placing corner workstations next to other corner workstations without a rectangular worksurface return. Mending plate size is 2" x 4".

SPECIFICATION OPTIONS

product #: See charts below

ORDER EXAMPLE

product #: Q1FASS22-0-ZN

Options/Notes

- Sold in pairs

MENDING PLATES

PART #	HEIGHT	A	B	C	D	PRICE	NOTES
Q1FASS22-0-ZN	-	-	-	-	-	$5	• N/A

Anti-Sag Bars

PART #	WIDTH	LIST	NOTES
FWASB.42	42”	$95	• Anti-Sag bar, 42” wide with (8) screws. For use with 48 & 54” worktops • Anti-Sag bar, 54” wide with (10) screws. For use with 60 & 66” worktops • Anti-Sag bar, 66” wide with (12) screws. For use with 72 & 78” worktops
FWASB.54	54”	$121	
FWASB.66	66”	$146	

Components

DESCRIPTION
Components for the workstation.

SPECIFICATION OPTIONS	ORDER EXAMPLE
product #: See charts below **finish**: See page 9	**product #**: Q1FLED.20 **finish**: CW, Cloud White

LED TASKLIGHT

PART #	HEIGHT	WIDTH	DEPTH	PRICE
Q1FLED.20	0.75″	20″	1″	$232
Q1FLED.38	0.75″	38″	1″	$292

NOTES

- Attaches beneath a shelf or storage cabinet.
- It includes an LED light, motion sensor, power cord and installation hardware. The cord for the tasklight is 6 ft. long.
- Has a pivot range of +/-15°.
- For overheads 24”-36” use FLED.20
- For overheads 42” or wider use FLED.38
- Finish: Silver

WIRE MANAGER

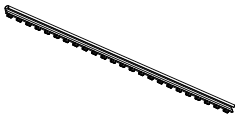

PART #	HEIGHT	WIDTH	DEPTH	PRICE
Q1F2WM.24	24″	0.5″	-	$23

NOTES

- This Wire Manager is used to manage electrical cords vertically. It fits between side-by-side panels, or between a panel and a connector.
- Finish: Black.

MESH WIRE MANAGER

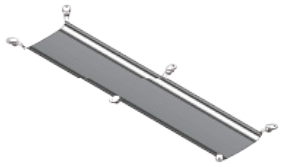

PART #	LENGTH	PRICE
FFWM.18	18”	$125

NOTES

- Wire manager mounts to the bottom of a worksurface to manage cords
- Finish: Black with red zipper

PENCIL DRAWER

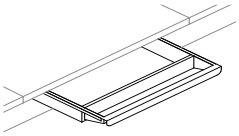

PART #	HEIGHT	WIDTH	DEPTH	PRICE
Q1FPD	1.875″	21.125″	16.25″	$198

NOTES

- Stores small items.
- Attaches under worksurface.
- Includes attachment hardware.
- Finish: DT Dark Tone, MT Medium Tone.

Tackboards

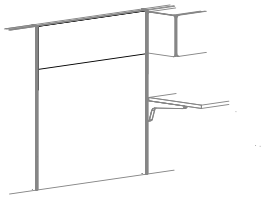

DESCRIPTION

Fabric covered tackable surface that attaches to panel or Wall Strips.

SPECIFICATION OPTIONS

product #: See charts below
fabric: page 7

ORDER EXAMPLE

product #: Q1FHTAKBS.0924
fabric: PF301-1 Sky/Terra

Options/Notes

- Includes attachment hardware.
- For "A" style components, call factory for availability
- **Passage and Terrain fabric not approved for this application**

"B" STYLE TACKBOARD, SQUARE CORNERS, CURVED TOP & BOTTOM, 8.5" HIGH

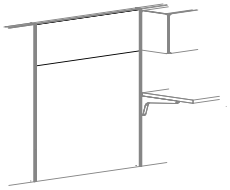

PART #	HEIGHT	WIDTH	DEPTH	PRICE	GROUP 5 UPCHARGE
Q1FHTAKBS.0924	8.5"	24"	-	$91	$10
Q1FHTAKBS.0930	8.5"	30"	-	$98	$10
Q1FHTAKBS.0936	8.5"	36"	-	$110	$12
Q1FHTAKBS.0942	8.5"	42"	-	$118	$12
Q1FHTAKBS.0948	8.5"	48"	-	$124	$12

"B" STYLE TACKBOARD, SQUARE CORNERS, CURVED TOP & BOTTOM, 15.5" HIGH

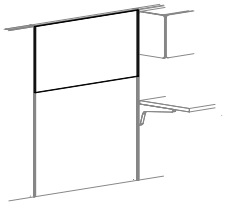

PART #	HEIGHT	WIDTH	DEPTH	PRICE	GROUP 5 UPCHARGE
Q1FHTAKBS.1624	15.5"	24"	-	$169	$18
Q1FHTAKBS.1630	15.5"	30"	-	$180	$18
Q1FHTAKBS.1636	15.5"	36"	-	$188	$20
Q1FHTAKBS.1642	15.5"	42"	-	$197	$20
Q1FHTAKBS.1648	15.5"	48"	-	$209	$22

Overheads and Shelves

DESCRIPTION

Metal shelf and overhead storage.

SPECIFICATION OPTIONS

product #: See charts below
support finish: See page 9

ORDER EXAMPLE

product #: Q1FHSHSH.0824
support finish: CW Cloud White

Options/Notes

- Two styles of profile available. Order to match sliding front overhead or pneumatic overhead.

STRAIGHT FRONT, HALF HEIGHT SHELF

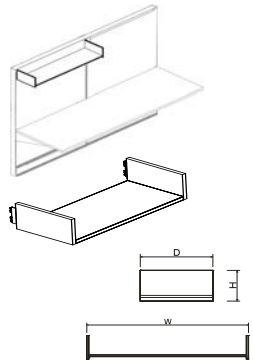

PART #	HEIGHT	WIDTH	DEPTH	PRICE
Q1FHSHSH.0824	7.5″	24″	13.5″	$151
Q1FHSHSH.0830	7.5″	30″	13.5	$159
Q1FHSHSH.0836	7.5″	36″	13.5″	$176
Q1FHSHSH.0842	7.5″	42″	13.5″	$193
Q1FHSHSH.0848	7.5″	48″	13.5″	$210

NOTES

- This shelf hangs from a frame or wall strips.
- Includes attachment hardware.
- Profile matches sliding front overhead.
- Specify Finish.

SLIDING DOOR OVERHEAD CABINET

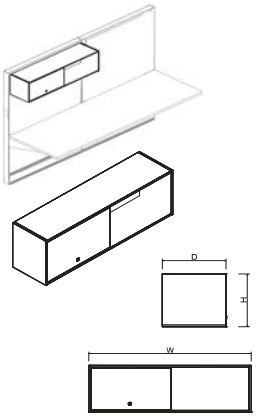

PART #	HEIGHT	WIDTH	DEPTH	PRICE
Q1FHSLOV.1624	15.5″	24″	14.25″	$426
Q1FHSLOV.1630	15.5″	30″	14.25″	$466
Q1FHSLOV.1636	15.5″	36″	14.25″	$507
Q1FHSLOV.1642	15.5″	42″	14.25″	$554
Q1FHSLOV.1648	15.5″	48″	14.25″	$600

NOTES

- This lockable sliding door storage cabinet hangs from a frame or wall strips. Includes a painted sliding door front, a lock and attaching hardware.
- Lock finish: Black
- Specify Finish.

UPMOUNT SLIDING OVERHEAD CABINET

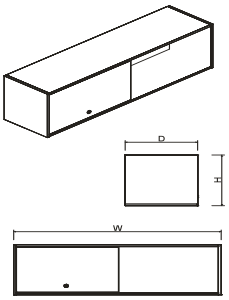

PART #	HEIGHT	WIDTH	DEPTH	PRICE
Q1FHSLOVU.1624	15.5″	24″	14.25″	$501
Q1FHSLOVU.1630	15.5″	30″	14.25″	$670
Q1FHSLOVU.1636	15.5″	36″	14.25″	$735
Q1FHSLOVU.1642	15.5″	42″	14.25″	$797
Q1FHSLOVU.1648	15.5″	48″	14.25″	$867

NOTES

- This lockable sliding door storage cabinet is up-mounted on a panel.
- Includes a painted sliding door front, a lock and attaching hardware.
- Door locks on left side only.
- If specifying a standard (non-LED) tasklight, specify one size smaller than the cabinet size. For example, when ordering a 42″ cabinet, specify a 36″ standard tasklight.
- Lock Finish: Black
- Specify Finish.

RADIUS FRONT, HALF HEIGHT SHELF

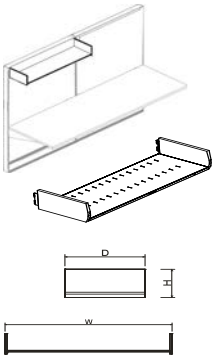

PART #	HEIGHT	WIDTH	DEPTH	PRICE
Q1FHPHSH.0824	7.5″	24″	16″	$156
Q1FHPHSH.0830	7.5″	30″	16″	$163
Q1FHPHSH.0836	7.5″	36″	16″	$181
Q1FHPHSH.0842	7.5″	42″	16″	$194
Q1FHPHSH.0848	7.5″	48″	16″	$204

NOTES

- This shelf hangs from a frame or wall strips.
- Includes attachment hardware.
- Profile matches pneumatic overhead.
- Specify Finish.

PNEUMATIC OVERHEAD CABINET

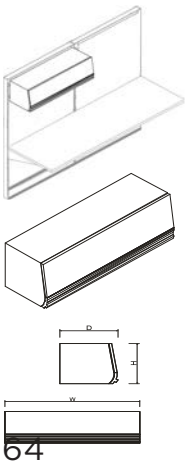

PART #	HEIGHT	WIDTH	DEPTH	PRICE
Q1FHPNOV.1624	15.5″	24″	16″	$501
Q1FHPNOV.1630	15.5″	30″	16″	$548
Q1FHPNOV.1636	15.5″	36″	16″	$594
Q1FHPNOV.1642	15.5″	42″	16″	$636
Q1FHPNOV.1648	15.5″	48″	16″	$687

NOTES

- This storage cabinet, with lockable pneumatic door, hangs from a frame or wall strips.
- Includes pneumatic assist flipper door, a lock, and attaching hardware.
- LED tasklight only.
- Lock finish: Black
- Specify Finish.

UPMOUNT PNEUMATIC OVERHEAD CABINET

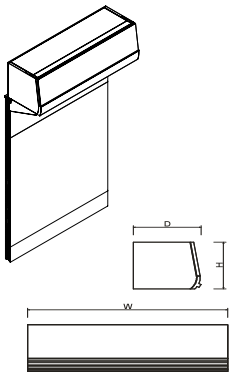

PART #	HEIGHT	WIDTH	DEPTH	PRICE
Q1FHPNOVU.1624	15.5″	24″	16″	$531
Q1FHPNOVU.1630	15.5″	30″	16″	$588
Q1FHPNOVU.1636	15.5″	36″	16″	$646
Q1FHPNOVU.1642	15.5″	42″	16″	$711
Q1FHPNOVU.1648	15.5″	48″	16″	$774

NOTES

- This storage cabinet, with lockable pneumatic door, up-mounts to the top of a panel.
- Includes pneumatic assist flipper door, a lock, and attaching hardware.
- LED tasklight only.
- Lock Finish: Black
- Specify Finish.

Pedestals

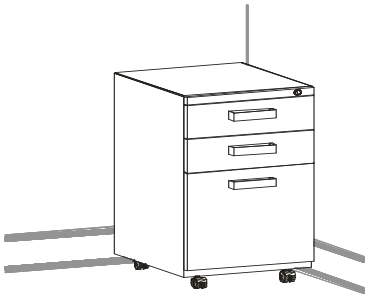

DESCRIPTION

Storage with drawers.

SPECIFICATION OPTIONS

product #: See charts below

ORDER EXAMPLE

product #: Q1FPEDSQP.BBF-MET

Options/Notes

- Square drawer front
- Order side-to-side file bars
- Includes pencil tray in top drawer
- Bar Pull is the default pull; to order other pulls see upcharge below
- Specify pull when ordering
- Designer Pull has color options: specify color when ordering. See page 10
- Bar Pull will be shipped in box on ALL orders, premium pulls will ship separately
- **If a cushion is placed on a full height mobile pedestal, it will not fit under a worksurface.**

BOX / BOX / FILE PEDESTAL

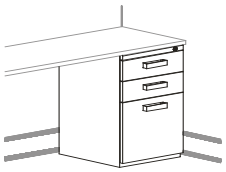

PART #	HEIGHT	WIDTH	DEPTH	PRICE
Q1FPEDSQP.BBF-MET	27″	15″	20″	$656
WEDGE, DESIGNER OR SLANT PULL				+ $75

NOTES

- Supporting metal pedestal with lock, without top cap. Attaches to the underside of a worksurface.
- Square drawer pulls, silver color. Square drawer front.
- Order side to side file bars.
- Includes pencil tray in top drawer
- Specify pull when ordering
- Designer Pull has color options: specify color when ordering. (see page 10)

FILE / FILE PEDESTAL

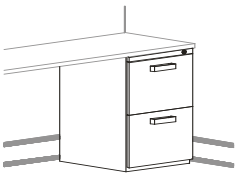

PART #	HEIGHT	WIDTH	DEPTH	PRICE
Q1FPEDSQP.FF-MET	27″	15″	20″	$656
WEDGE, DESIGNER OR SLANT PULL				+ $50

NOTES

- Supporting metal pedestal with lock, without top cap. Attaches to the underside of a worksurface.
- Square drawer pulls, silver color. Square drawer front.
- Order side to side file bars.
- Includes pencil tray in top drawer
- Specify pull when ordering
- Designer Pull has color options: specify color when ordering.
(see page 10)

BOX / FILE PEDESTAL MOBILE

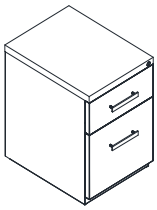

PART #	HEIGHT	WIDTH	DEPTH	PRICE
Q1FPEDSQP.BF-MOB-MET	22″	15″	20″	$719
WEDGE, DESIGNER OR SLANT PULL				+ $50

NOTES

- Free-standing mobile pedestal with lock and with top cap.
- Square drawer pulls, silver color. Square drawer front.
- Order side to side file bars.
- Includes pencil tray in top drawer
- Specify pull when ordering
- Designer Pull has color options: specify color when ordering. (see page 10)

BOX / BOX / FILE PEDESTAL MOBILE

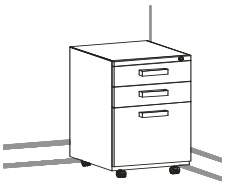

PART #	HEIGHT	WIDTH	DEPTH	PRICE
Q1FPEDSQP.BBF-MOB-MET	27.25″	15″	20″	$853
WEDGE, DESIGNER OR SLANT PULL				+ $75

NOTES

- Free-standing mobile pedestal with lock and with top cap.
- Square drawer pulls, silver color. Square drawer front.
- Order side to side file bars.
- Includes pencil tray in top drawer
- Specify pull when ordering
- Designer Pull has color options: specify color when ordering. (see page 10

If a cushion is placed on a full height mobile pedestal, it will not fit under a worksurface.

FILE / FILE PEDESTAL MOBILE

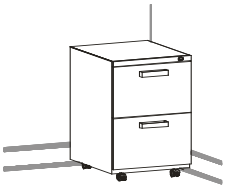

PART #	HEIGHT	WIDTH	DEPTH	PRICE
Q1FPEDSQP.FF-MOB-MET	27.25″	15″	20″	$853
WEDGE, DESIGNER OR SLANT PULL				+ $50

NOTES

- Free-standing mobile pedestal with lock and with top cap.
- Square drawer pulls, silver color. Square drawer front.
- Order side to side file bars.
- Includes pencil tray in top drawer
- Specify pull when ordering
- Designer Pull has color options: specify color when ordering. (see page 10

If a cushion is placed on a full height mobile pedestal, it will not fit under a worksurface.

SIDE-TO-SIDE FILE BARS

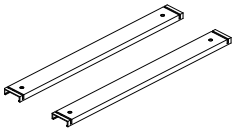

PART #	HEIGHT	WIDTH	DEPTH	PRICE	NOTES
Q1FSSB	-	-	-	$22	• Side-to-side File Bars for filing letter or legal size folders • Order one per file drawer. • Finish: Black

Lateral Files

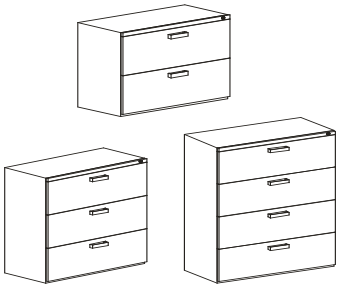

DESCRIPTION

Storage with drawers.

SPECIFICATION OPTIONS

product #: See charts below
finish: See page 9
pull: See page 10

ORDER EXAMPLE

product #: Q1FLFSQP-2-30-MET
finish: DT Dark Tone
pull: Designer pull - Cloud White/Red -
+ $75 (see upcharge below)

Options/Notes

- Freestanding 3- and 4-drawer lateral files must be bolted together or bolted to a wall.
- Specify pull when ordering.
- Designer pull has color options: specify color when ordering. (See page 10)
- Bar Pull will be shipped in box on ALL orders, Premium Pulls will ship separately.

FREE-STANDING 2-DRAWER LATERAL FILE WITH TOP CAP

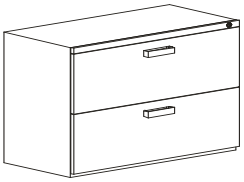

PART #	HEIGHT	WIDTH	DEPTH	PRICE
Q1FLFSQP-2-30-MET	27.5″	30″	20″	$1,177
Q1FLFSQP-2-36-MET	27.5″	36″	20″	$1,428
WEDGE, DESIGNER OR SLANT PULL				+ $50

NOTES

- Supporting lateral file with lock and finished top cap.
- Square drawer pulls, silver color. Square drawer front.
- Order front to back file bars.
- Order counterweight to convert to free-standing lateral file.
- Specify pull when ordering
- Designer Pull has color options: specify color when ordering. (see page 10)

LATERAL FILE COUNTERWEIGHT

PART #	USAGE	PRICE
Q1FLFCW-30	use with 30" W lateral file*	$66
Q1FLFCW-36	use with 36" W lateral file**	$99

NOTES

- Attaches securely to the inside back of the lateral file.
- For use with 2-Drawer lateral files only.
- [*] Includes one 20 lb counterweight
- [**] Includes two 20 lb counterweights, for a total of 40 lbs of counterweight

FRONT-TO-BACK FILE BARS

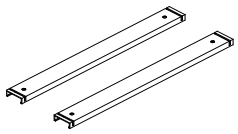

PART #	HEIGHT	WIDTH	DEPTH	PRICE
Q1FFB	3/8"	1 3/16"	15 11/16"	+ $25

NOTES

- Front to back file bars.
- Package of two.
- Order one package of two per drawer.
- Color: Black.

EXTENDED GLIDES

PART #	HEIGHT	WIDTH	DEPTH	PRICE
FLFEG4.2				$50

NOTES

Lateral file extended glide 2", pack of 4, for use with metal 2 drawer lateral files.

Order (1) pack per lateral file.

No finish selection

Accessories

DESCRIPTION

Workstation accessories.

SPECIFICATION OPTIONS

product #: See charts below
finish: See page 9

ORDER EXAMPLE

product #: Q1FTB.24
finish: CW

Options/Notes

- N/A

TOOL BARS

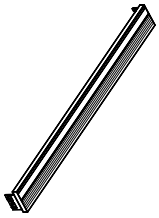

PART #	HEIGHT	WIDTH	DEPTH	PRICE
Q1FTB.24	3.5″	24″	0.75″	$77
Q1FTB.30	3.5″	30″	0.75″	$94
Q1FTB.36	3.5″	36″	0.75″	$110
Q1FTB.42	3.5″	42″	0.75″	$127
Q1FTB.48	3.5″	48″	0.75″	$142

NOTES

- Attaches to a panel of same width.
- Mounting hardware included.

FLAT PAPER TRAY

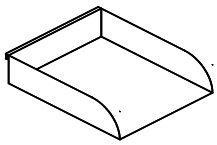

PART #	HEIGHT	WIDTH	DEPTH	PRICE
Q1FFPT	3″	10″	12″	$42

NOTES

- Order tool bar separately.

VERTICAL SINGLE TRAY

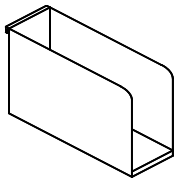

PART #	HEIGHT	WIDTH	DEPTH	PRICE
Q1FVST	8″	4″	12″	$40

NOTES

- Order tool bar separately.

VERTICAL TRIPLE TRAY

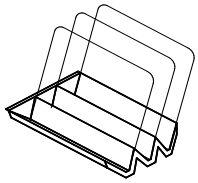

PART #	HEIGHT	WIDTH	DEPTH	PRICE
Q1FVTT	11″	12″	12″	$78

NOTES

- Order tool bar separately.

CARPET GRIPPER

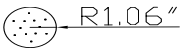

PART #	HEIGHT	WIDTH	DEPTH	PRICE
Q1FTCG	-	2.125″	-	$6

NOTES

- Plastic Gripper fits onto the adjustable glides of panel.
- Finish: Black
- Do not use on hard surface flooring.

Keyed Alike

DESCRIPTION
All, overheads, credenzas and towers can be keyed alike

SPECIFICATION OPTIONS	ORDER EXAMPLE
product #: See charts below	**product #**: METAL1-KEY-ALIKE-4

Options/Notes

- Keyed-Alike Lock Cores are sold in sets of 4.
- Each set includes four Lock Cores, each with two keys, all with the same lock number.
- Lock core removal/change keys will need to be ordered separately.
- Additional Lock Core Removal Keys and Master Keys are available.

KEYED-ALIKE LOCKS

PART#	DESCRIPTION	PRICE
METAL1-KEY-ALIKE-4	Lock Core Keyed-Alike (set of 4) - Type 1 Metal Storage	$139
METAL1-KEY-ALIKE-6	Lock Core Keyed-Alike (set of 6) - Type 1 Metal Storage	$209
METAL1-FCK	Lock Core Change Key - Type 1 Metal Storage	$21
METAL1-FMK	Lock Core Master Key - Type 1 Metal Storage	$21
LAM1-KEY-CORE	Single Lock Core - Type 1 Laminate Storage	$35 each